4. PARTS LIST FOR EACH ASSY

1. PLATE T, PANEL LOWER AS

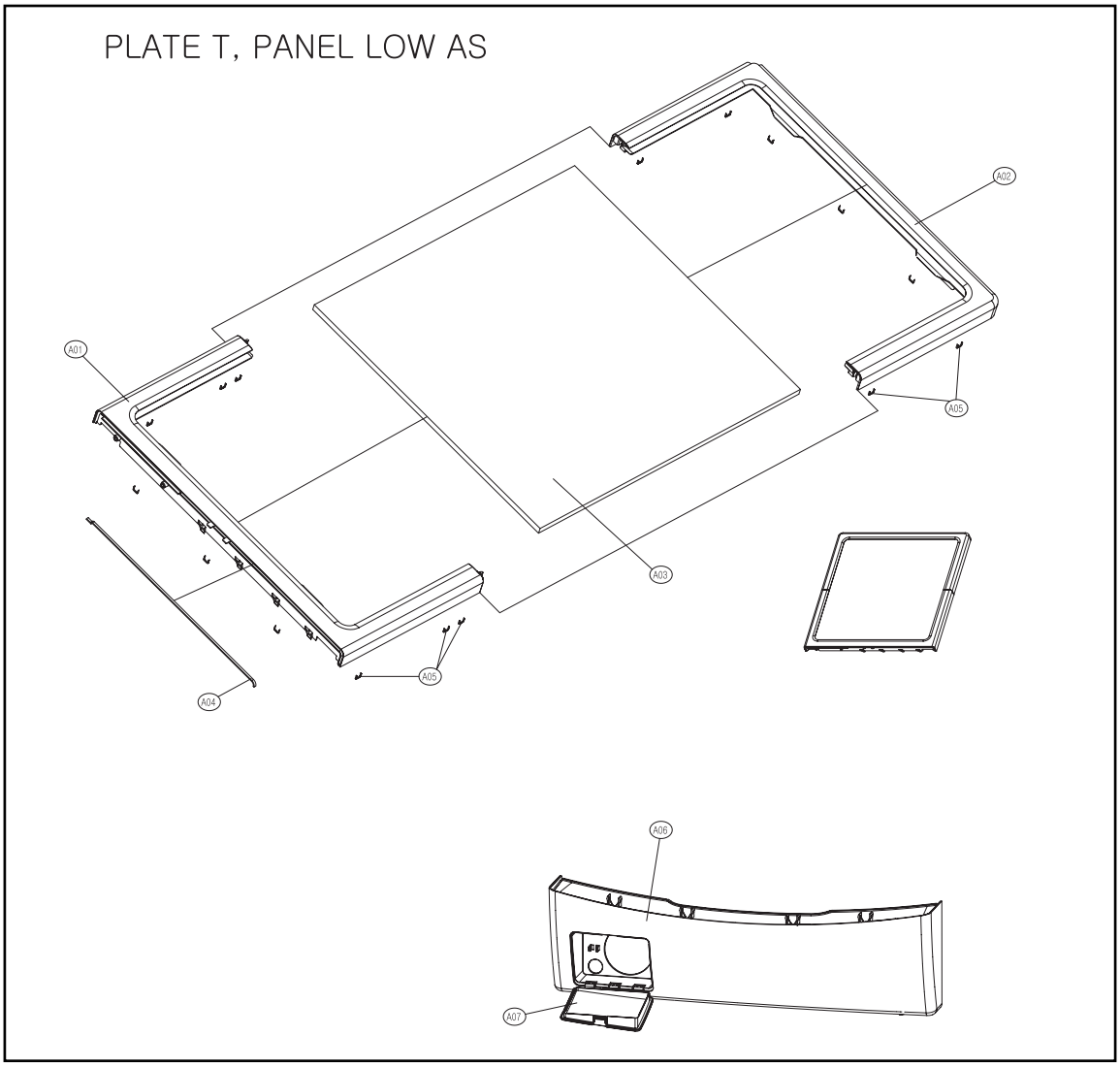

No.	PARTS NAME	PARTS CODE	DESCRIPTION	Q'TY	REMARK
A01	FRAME PLATE F	3612204400	HIPS	1	
A02	FRAME PLATE REAR	3612204500	HIPS	1	
A03	PLATE TOP	3614531600	WOOD	1	
A04	PAD CUSHION	3614110500	SPONGE	1	
A05	FIXTURE PLATE T	3612007100	STAPLE(8x10)	1	
	SCREW TAPPING	7122401411	T2S TRS 4x14 MFZN	2	
A06	PANEL LOWER	3614284200	HIPS	1	
A07	COVER PRMP	3611426400	HIPS	1	

2. PANEL F AS(Luxury)

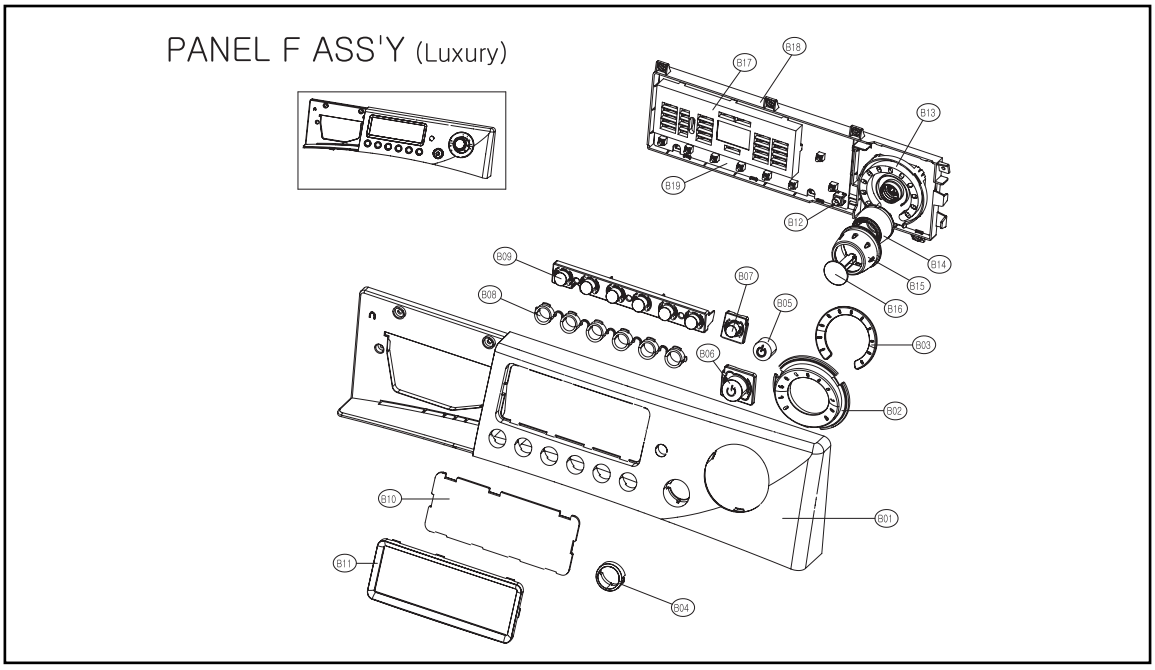

No.	PARTS NAME	PARTS CODE	DESCRIPTION	Q'TY	REMARK
B01	PANEL F	3614282200	ABS	1	
B02	HOLDER COURSE OUT	3613049000	ABS, GUILDING_BASE	1	
B03	HOLDER COURSE IN	3613048900	ABS(TR558)	1	
B04	DECORATOR POWER	3611631000	ABS, UV_BASE	1	
B05	BUTTON POWER IN	3616602800	ABS	1	
B06	BUTTON POWER OUT	3616602900	ABS(TR558)	1	
B07	BUTTON DOOR LOCK	3616602600	ABS	1	
B08	DECORATOR FUNCTION	3611630900	ABS, GILDING_BASE	1	
B09	BUTTON FUNCTION	3616602700	ABS, UV_BASE	1	
	SCREW TAPPING	7121301508	T2S PAN 3x15 MFNI	3	
B10	WINDOW DISPLAY	3615502700	ABS(TR558)	1	
B11	DECORATOR WINDOW	3611630800	ABS, GILDING_BASE	1	
B12	HOLDER POWER	3613048800	ABS(TR558)	1	
B13	HOLDER COURSE MAIN	3613049100	ABS	1	
B14	BUTTON DIAL MIDDLE	3616602400	ABS, GILDING_BASE	1	
B15	BUTTON DIAL OUT	3616602500	ABS(TR558)	1	
B16	BUTTON DIAL IN	3616602300	ABS, GILDING_BASE	1	
B17	CUSTOM LED	3613014400	ABS	1	
B18	CASE PCB FRONT	3611139600	HIPS	1	
B19	PCB	PRPSSWD15	E1211R/P	1	DRY
		PRPSSWD16	E1211W/P	1	WASH
	SCREW TAPPING	7122401411	T2S TRS 4X14 MFZN	7	

■ Mid

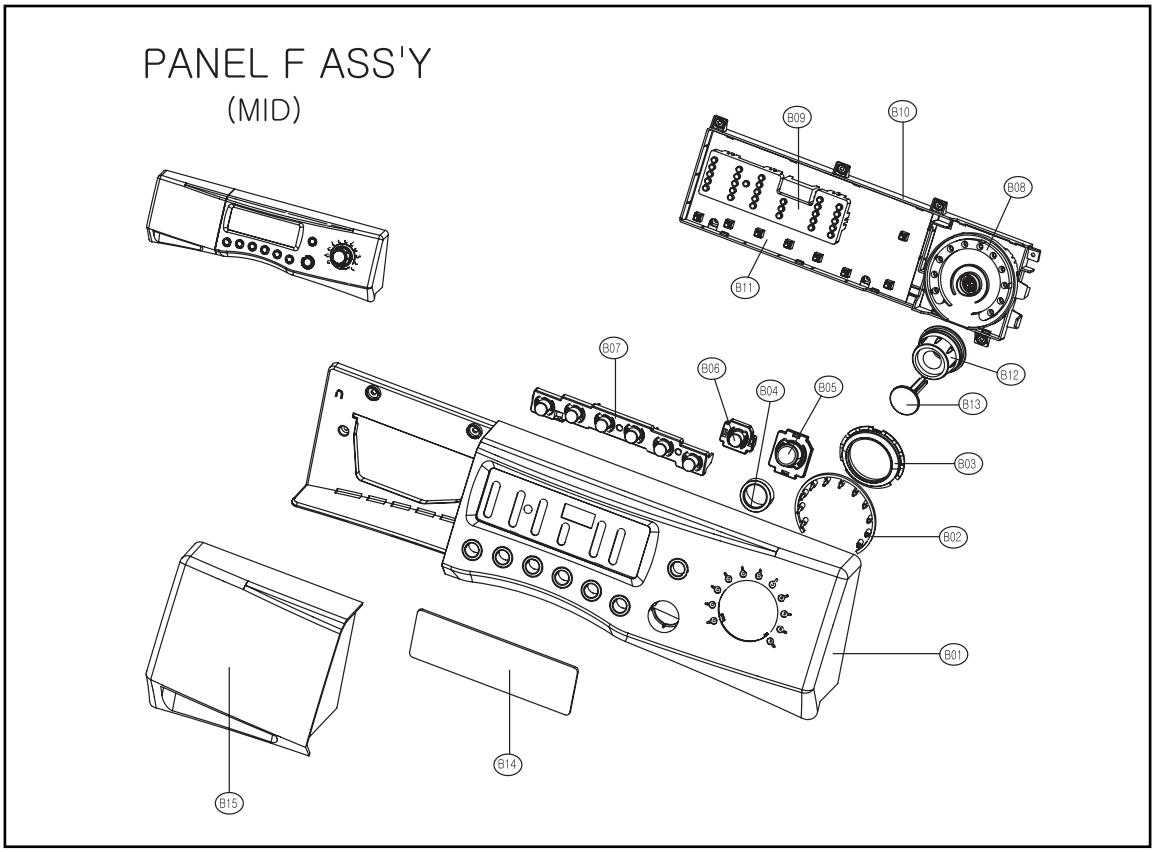

No.	PARTS NAME	PARTS CODE	DESCRIPTION	Q'TY	REMARK
B01	PANEL F	3614282300	ABS	1	
B02	WINDOW LED COURSE	3615502900	ABS(BK 8410AT)	1	
B03	DECORATOR DIAL	3613049400	ABS	1	
B04	DECORATOR BUTTON POWER	3611631100	ABS	1	
B05	BUTTON POWER	3616603100	ABS	1	
B06	BUTTON DOOR OPEN	3616603200	ABS	1	
B07	BUTTON FUNCTION	3616603000	ABS	1	
	SCREW TAPPING	7121301208	T2S PAN 3x12 SUS	3	
B08	HOLDER LED COURSE	3613049300	ABS	1	
B09	HOLDER LED CUSTOM	3613049200	ABS	1	
B10	CASE PCB F	3611139600	HIPS	1	
	SCREW TAPPING	7122401411	T2S TRS 4x14 MFZN	7	
B11	PCB	PRPSSW2D10	–	1	
B12	SUTTON DIAL OUT	3616603400	ABS	1	
B13	BUTTON DIAL IN	3616603300	ABS	1	
B14	WINDOW DISPLAY	3615502800	ABS(BK 8410AT)	1	
B15	CASE HANDLE	3611139700	ABS	1	INLETBOX AS

■ Cheap

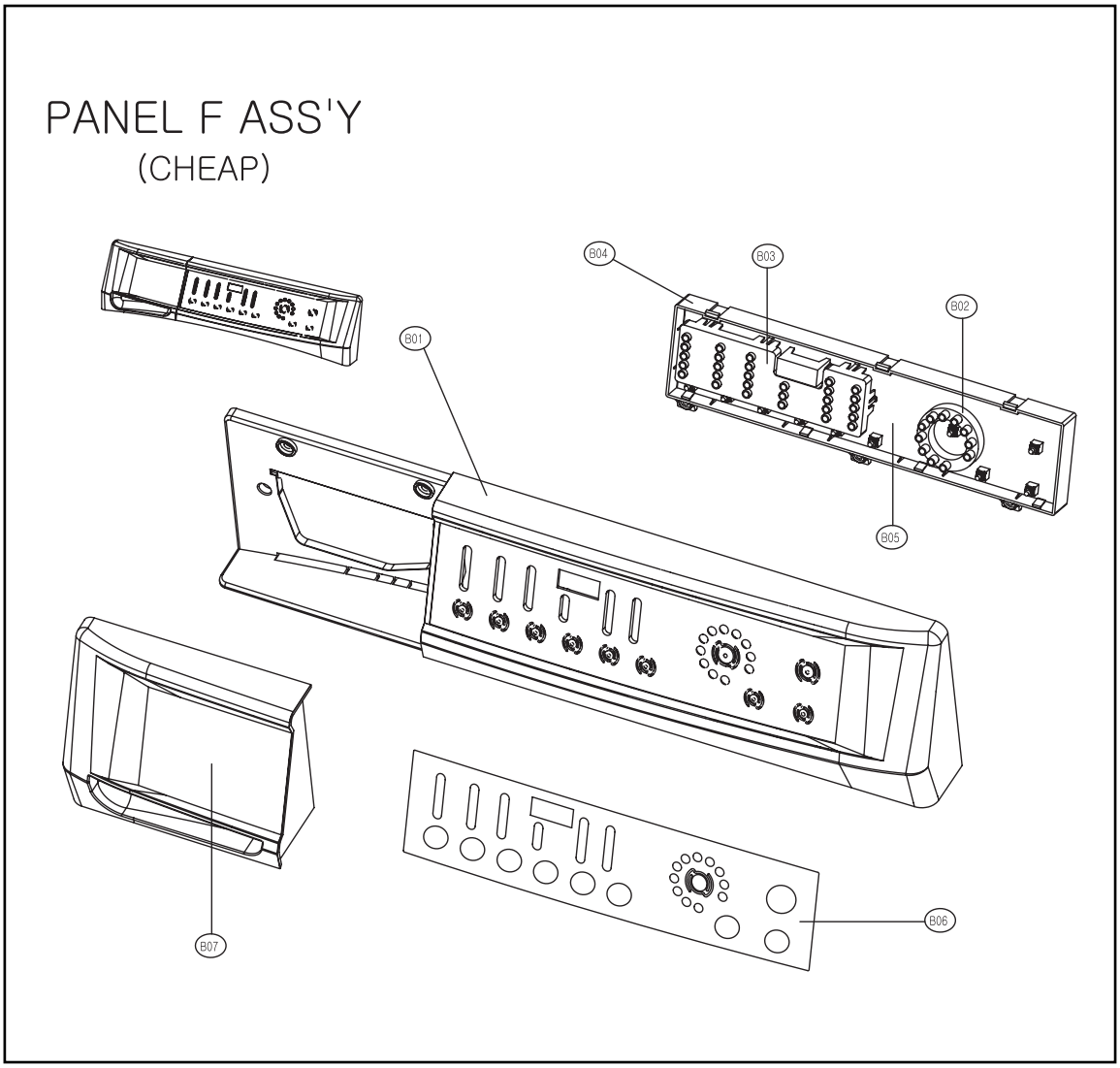

No.	PARTS NAME	PARTS CODE	DESCRIPTION	Q'TY	REMARK
B01	PANEL F	3614282400	ABS	1	
B02	HOLDER LED COURSE	3613049500	ABS	1	
B03	HOLDER LED CUSTOM	3613049200	ABS	1	
B04	CASE PCB F	3611139900	HIPS	1	
B05	PCB	PRPSSW4D10	–	1	
	SCREW TAPPING	7122401411	T2S TRS 4x14 MFZN	3	
B06	DECORATOR FILM	3611632600	PC FILM	1	
B07	CASE HANDLE	3611139800	ABS	1	INLETBOX AS

3. CABINET F AS

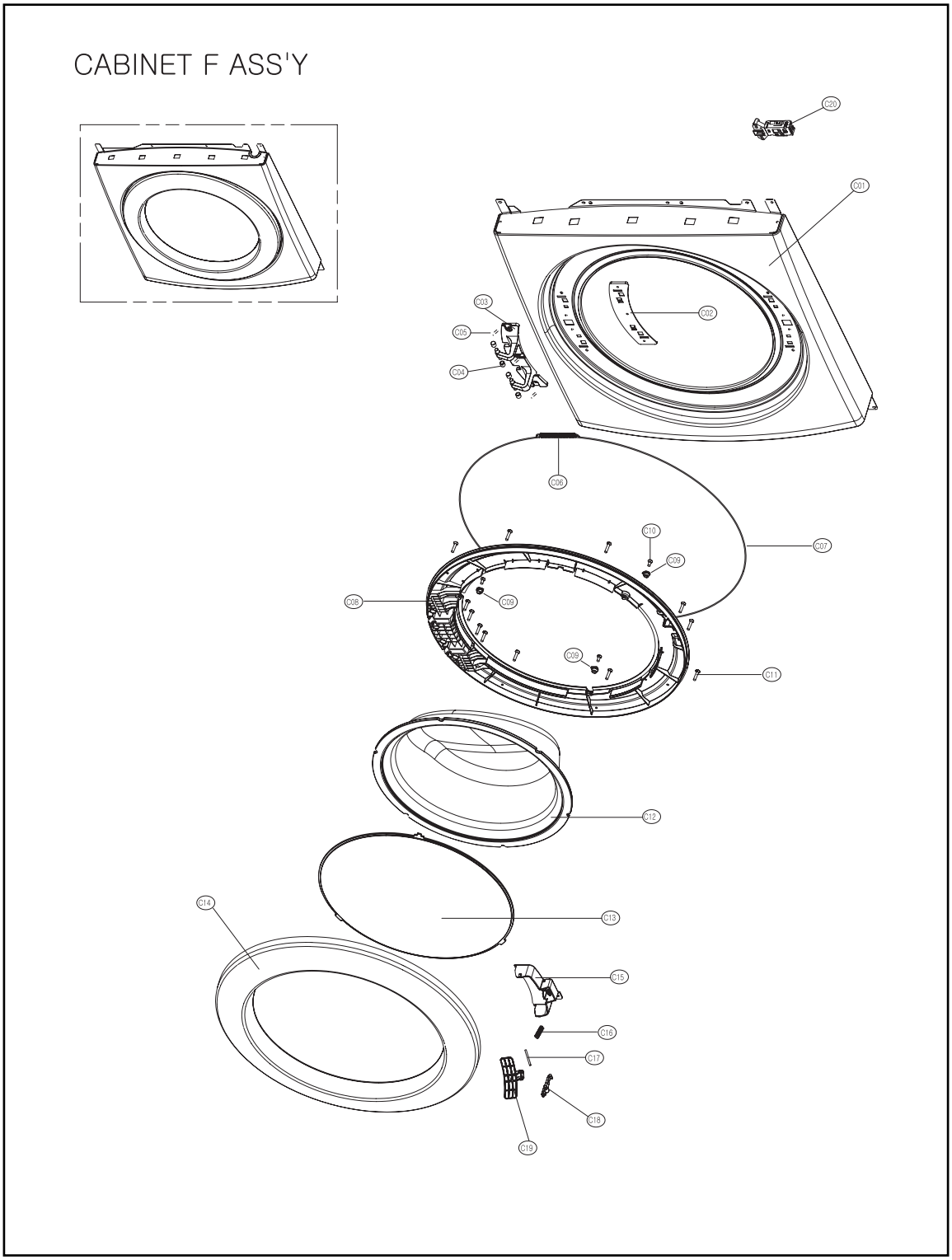

No.	PARTS NAME	PARTS CODE	DESCRIPTION	Q'TY	REMARK
C01	CABINET F	3610811000	SECD, 0.8t	1	
C02	PLATE HINGE SUPPORT	3614531500	SPG, 1.6t	1	
C03	HINGE DOOR	3612902700	ALDC	1	
C04	CAP HINGE DOOR	3610916500	POM	1	
C05	SCREW TAPPING	3616030000	F/L BOLT(SE) 5x12 SUS	3	
C06	SPRING DOOR	3615113800	D=1.0, N=7	1	
C07	CLAMP DOOR	3611204200	HWSR3, D=1.4	1	
C08	FLAME DOOR I	3611204700	PP	1	
C09	STOPPER DOOR	3615202300	PP	3	
C10	SCREW TAPPING	7122401608	T2S TRS 4x16 SUS	2	
C11	SCREW TAPPING	7115402008	T1S FLT 4x20 SUS430 NATURAL	15	
C12	DOOR GLASS	361A110600	GLASS(DWD-100DR)	1	
C13	PROTECTOR GLASS	3618304201	ABS TRANSPATENT	1	
C14	FRAME DOOR O	3612204600	ABS	1	CR
C15	COVER HANDLE	3611425620	ABS	1	CR
C16	SPRING HOOK	3615113700	SUS, ID=3, NI=7, D=ø0.9	2	
C17	PIN HANDLE	3618200100	SUS, D=3.0, L=39	1	
C18	HOCK DOOR	3613100700	Zn-DC	1	
C19	HANDLE DOOR	3612608200	ABS	1	
C20	SWITCH DOOR LOCK	3619046410	DF F11 110 125V 16A	1	
		3619046400	DF F01 007 220V 16A	1	

4. INLET BOX AS

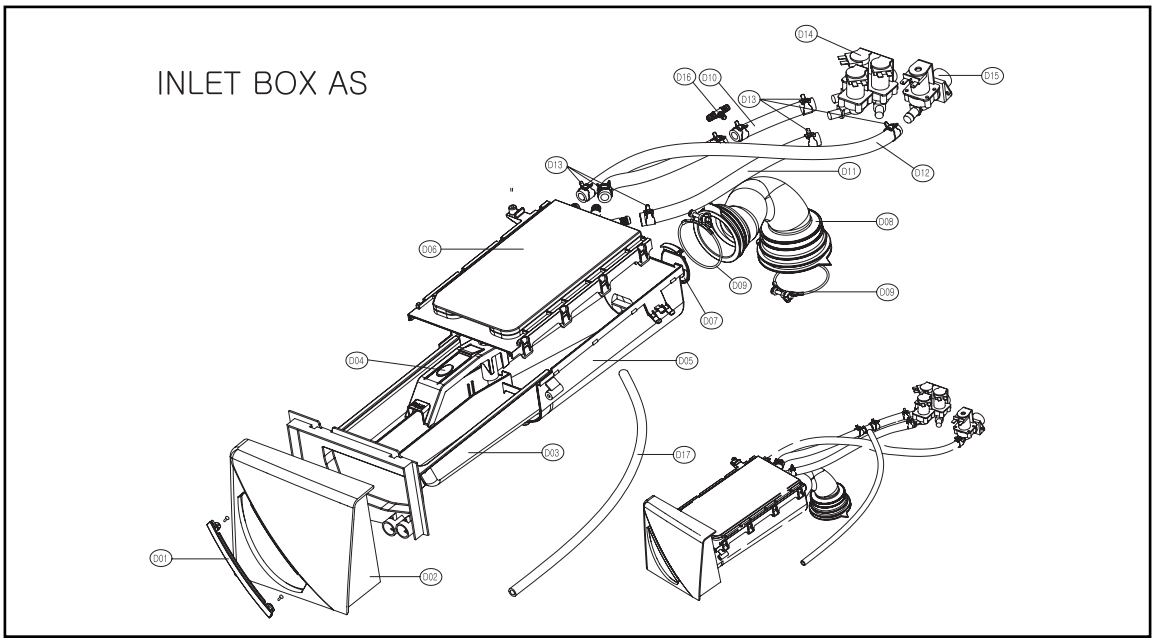

No.	PARTS NAME	PARTS CODE	DESCRIPTION	Q'TY	REMARK
D01	HANDLE CAP	3612608300	ABS	1	Luxury
D02	CASE HANDLE	3611139400	ABS	1	Luxury
	SCREW TAPPING	7121301208	T2S PAN 3x12 SUS	2	HANDLE CAP
D03	CASE DETERGENT	3611139500	PP	1	
D04	CAP SOFTENER	3610916600	PP	1	
D05	INLETBOX	3617505300	PP	1	
D06	NOZZLE AS	3618103500	PP, DWD-100DR	1	TOP+UNDER
D07	PACKING	3614010000	EPDM	1	
D08	HOSE INLET	3613266400	EPDM	1	
D09	CLAMP AS	3611203200	ID=60, WIRE+GUIDE+BOLT+NUT	1	INLET BOX/TUB R
D10	HOSE C	3613267010	EPDM, ID=10, OD=16, L=165mm	2	PRE WASH
D11	HOSE A	3613266600	EPDM, ID=10, OD=16, L=335mm	1	MAIN WASH
D12	HOSE B	3613266700	EPDM, ID=10, OD=16, L=420mm	1	HOT
D13	CLAMP SPRING	3611203800	ID=15.5, T=0.6, B=10	8	
D14	VALVE INLET	3615415900	100/130V, 3WAY, PP/BRACKET	1	COLD
		3615415000	220/240V, 50/60Hz, 3WAY	1	COLD
		3615415010	220/240V, 3WAY, NYLON/BRACKET	1	COLD, VDE
		3615415800	100/130V, 2WAY, PP/BRACKET	1	COLD
		3615414900	220/240V, 50/60Hz, 2WAY	1	COLD
		3615414910	220/240V, 2WAY, NYLON/BRACKET	1	COLD, VDE
D15	VALVE INLET	3615415700	100/130V, 1WAY, PP/BRACKET		HOT
		3615414800	220/240V, 1WAY, PP/BRACKET		HOT
		3615414810	240V, 1WAY, PP/BRACKET	1	HOT-AUS
D16	PIPE JOINT	3614413300	PP	1	
D17	HOSE SHOWER	3613270100	EPDM, ID=8.5, OD=12.5, L=620	1	

5. DUCT + DUCT PIPE AS

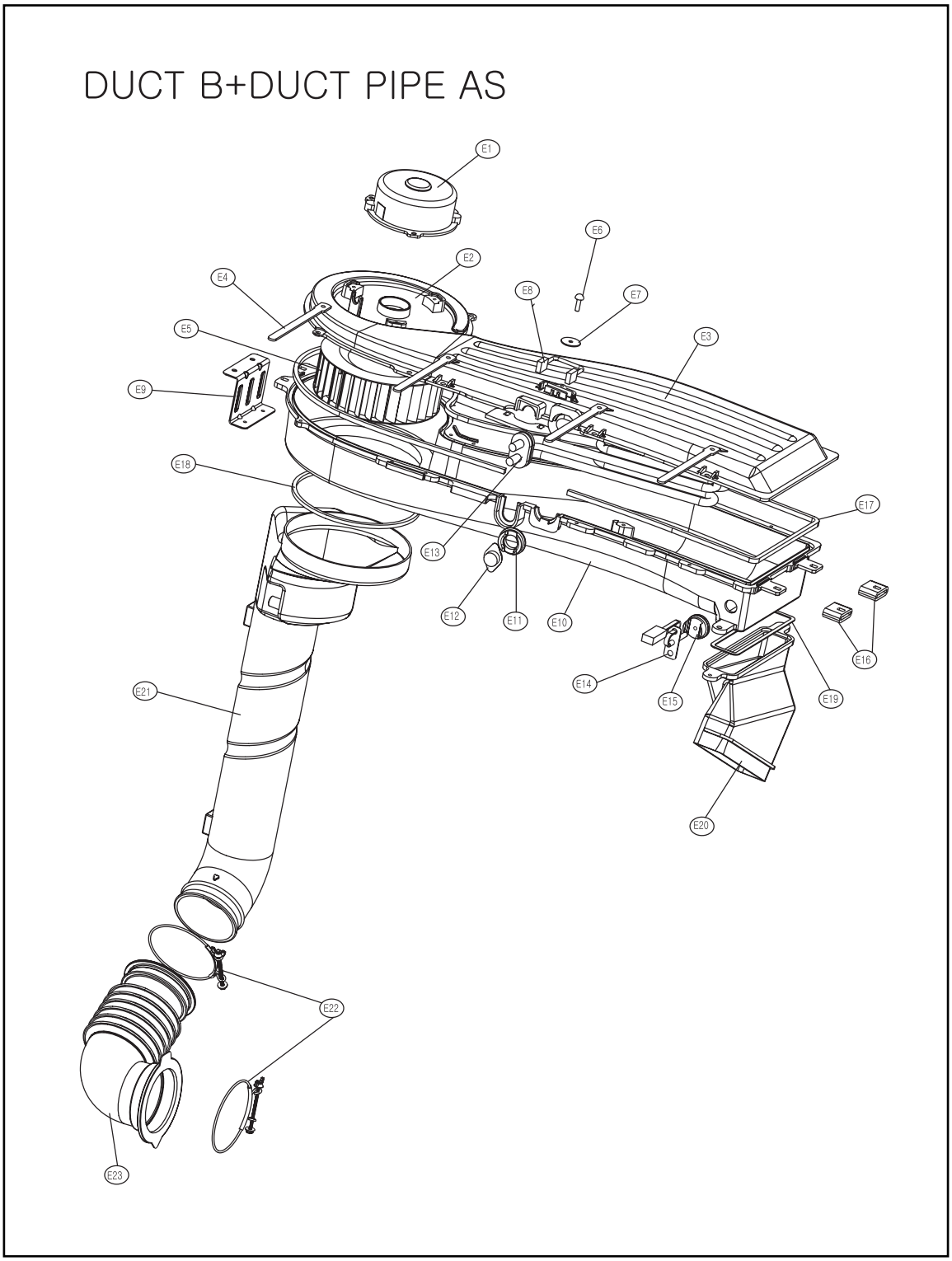

■ Duct + Duct pipe as

No.	PARTS NAME	PARTS CODE	DESCRIPTION	Q'TY	REMARK
E01	UNIT FAN MOTOR	36189L3Z41	ISM-77806DWWA, 24V CW 8P 14W	1	
E02	COVER DUCT	3611426600	PBT+GF30%	1	
E03	DUCT B UPPER	361A200200	AL, 2.5T, DWD-100DR	1	
E04	CLAMP CORD	3611203330	DABE-1, A=9, B=5.3, L=105	4	
E05	FAN AS	3611885700	Ø133x45L IMPELLER	1	
E06	SCREW TAPPING	7122400811	T2S TRS 4x8 MFZN	3	
E07	WASHER PLAN	7400432011	PW4.3x20xIT	1	
E08	FUSE TEMPERATURE	361A800120	120°C DF-128S 15A 250V VDE	1	
E09	FRAME HEATER FRANGE	3612204100	SBHG 1.0T	1	
E10	DUCT B THERMOSTAT	361A200100	AL	1	
E11	PACKING THERMOSTAT	3614009900	SILICON	1	
E12	SWITCH THERMOSTAT	3619046500	ON 120°C, OFF 150°C 230V	1	
E13	HEATER DRY	3612800900	220V 210W, 23.050HM, 6.1W/SQ	1	
		3612801400	230V 2.1KW, 25.190HM, 6.1W/SQ	1	
		3612801600	240V 2.1KW, 27.430HM, 6.1W/SQ	1	
		3612801300	110V, 1.2KW, 10.080HM, 3.5W/SQ	1	
		3612801800	120V 1.2KW, 120MH 3.5W/SQ	1	
E14	THERMISTOR DRY	361AAAAC00	R40=26.065k, R90=4.4278k	1	
E15	PACKING RUBBER	3614009800	SILICON, DWD-100DR	1	
E16	CUSHION DRY	3611562800	NBR, DWD-100DR	2	
E17	GASKET SEAL A	3612320820	DWD-110RP, O TYPE ø5, L=1385	1	
E18	GASKET SEAL B	3612320830	EPDM FOAM L=415, ø5	1	
E19	GASKET INLET	3612320900	DWD-100DR	1	
E20	DUCT GUIDE	361A201000	ALDC, DWD-110RP	1	
E21	DUCT PIPE AS	361A200700	11kg	1	
E22	CLAMP AS(DUCT)	3611203700	DUCT	2	
E23	BELLOWS DUCT	3616403000	EPDM	1	

6. CABINET AS

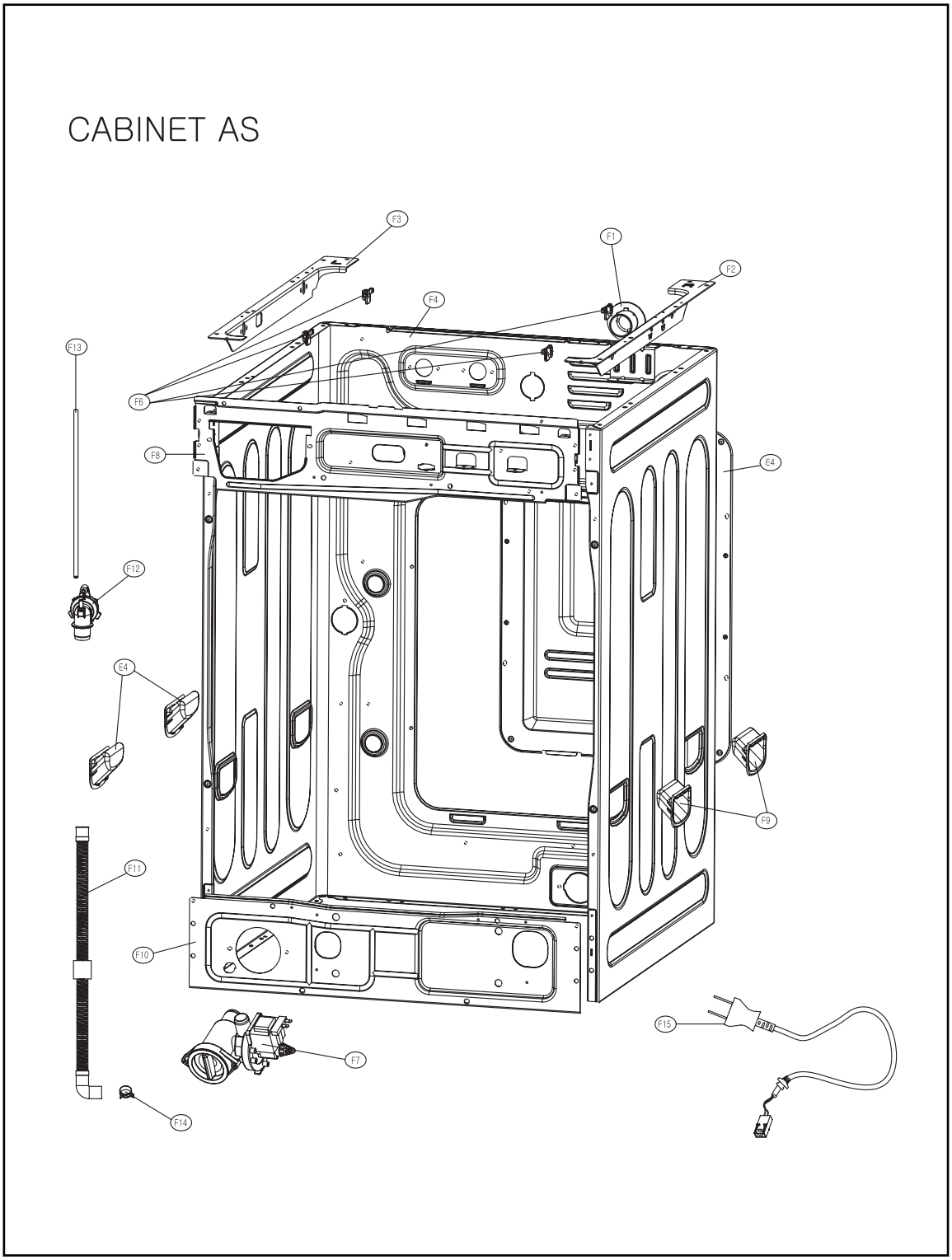

■ Cabinet As

No.	PARTS NAME	PARTS CODE	DESCRIPTION	Q'TY	REMARK
F01	NOZZLE AIR	3618103110	PP, DWD-100DR	1	
F02	FRAME TOP R	3612204300	GI, 1.6T, DWD-100DR	1	
F03	FRAME TOP L	3612204900	GI, 1.6T, DWD-100DR	1	
F04	CABINET	3610810900	SGCC 0.8T, PANTING, DWD-100DR	1	
F05	COVER BACK AS	3611425510	COVER BACK_PAD	1	
F06	STOPPER SPRING	3615202200	POM, DWD-100DR	4	
F07	UNIT DRAIN PUMP AS	36189L4F00	220~240/50Hz, B20-6	1	
		36189L4E00	220/60Hz, B20-5	1	
		36189L4D00	110~130/50/60Hz, B20-3	1	
F08	FRAME UPPER	3612204000	SBHG 1.2T, DWD-100DR	1	
F09	HANDLE CABINET	3612608100	PP, DWD-100DR	1	
F10	FRAME LOWER	3512204200	SBHG 1.2T, DWD-100DR	1	
F11	HOSE DRAIN I	3613269500	ST+EL, 840M	1	
F12	CUFF DRAIN HOSE	3616802600	PP, PUMP	1	
F13	HOSE SIPHON	3613269600	EPDM	1	
F14	CLAMP HOSE	3611204700	D=27	1	
F15	CORD POWER AS	3611339910	H05VV-F, 1.5SQx3C, 250V16A	1	EU-2PIN
		3611339930	H05VV-F, 1.5SQ, 250V16A, FERRITE	1	EU-2PIN
		3611339510	250V15A, IEC53, 1.5SQx3C	1	CP-2PIN
		3611339310	H05VV-F, 1.5SQx3C, 250V16A		CP-2PIN
		3611339810	VCTFK 2C 15A 125V	1	F-2PIN
		3611340910	H05VV-F, 1.0SQx3C, 250V16A	1	ISRAEL
		3611340710	H05VV-F, 1.5SQx3C, 250V15A	1	BS1363A
		3611340310	H05VV-F, 1.5SQx3C, 250V16A	1	BS1363A
		3611339710	H05VV-F, 1.5SQx3C, 250V15A	1	AUS
		3611340110	H05VV-F, 1.5SQx3C, 250V10A	1	AUS
		3611340010	H05VV-F, 1.5SQx3C, 250V	1	AUS
		3611340610	H05VV-F, 1.5SQx3C, 250V10A	1	S.AFRICA
		3611340410	16AWG 125V13A, #1806 3P	1	U.S.A

7. BASE U AS

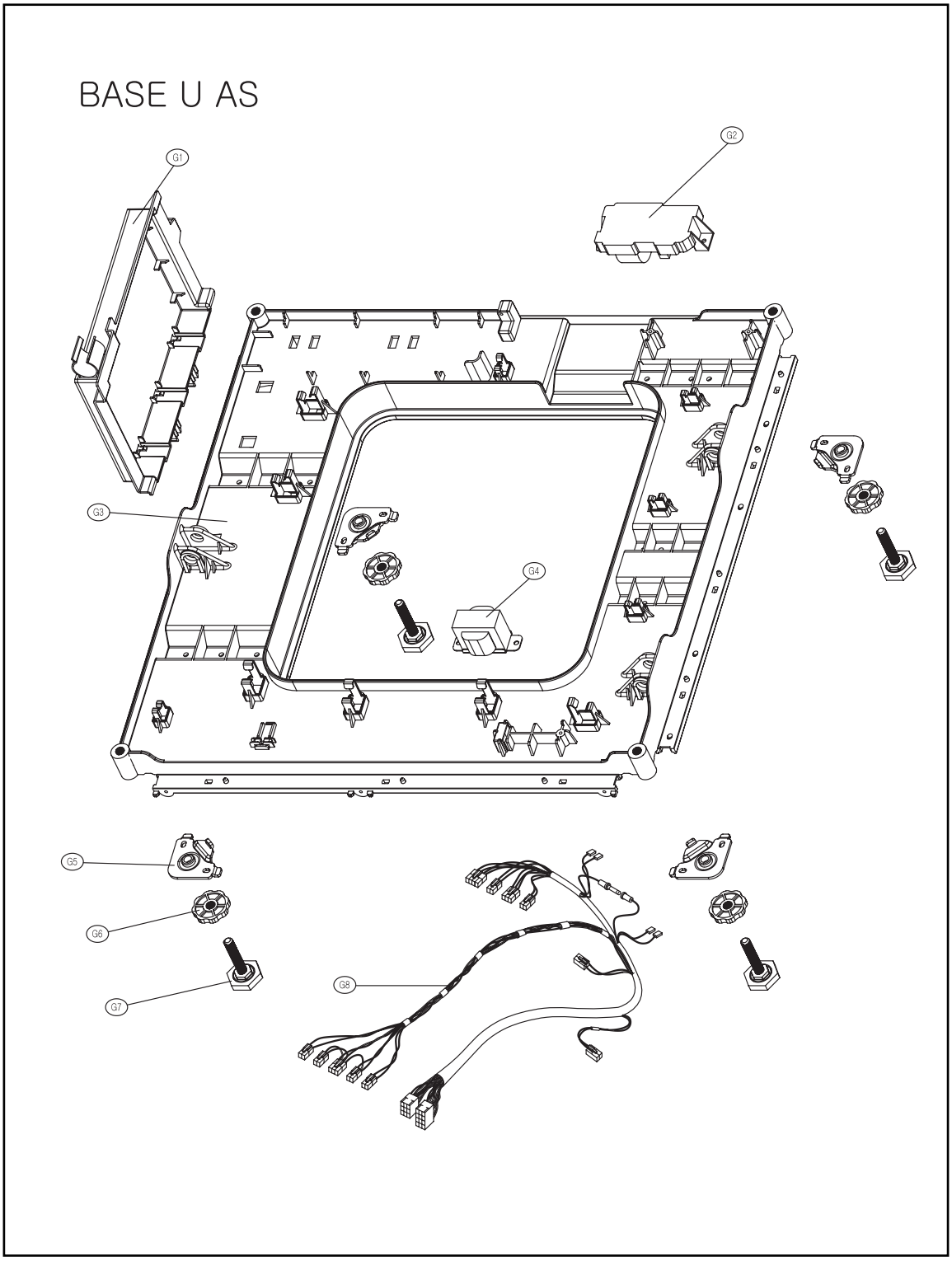

■ Base u as

No.	PARTS NAME	PARTS CODE	DESCRIPTION	Q'TY	REMARK
G01	PCB AS	PRPSSW7D05	E1211R, DOUBLE VALVE	1	DRY
		PRPSSW7D06	E1211W, DOUBLE VALVE	1	WASH
		PRPSSW7D07	E1211R, SINGLE VALVE	1	DRY
		PRPSSW7D08	E1211W, SINGLE VALVE	1	WASH
		PRPSSW7D09	E1211R	1	DRY, 127V
		PRPSSW7D10	E1211W	1	WASH, 127V
		PRPSSW8D05	E1221R, DOUBLE VALVE	1	DRY
		PRPSSW8D06	E1221W, DOUBLE VALVE	1	WASH
		PRPSSW8D07	E1221R, SINGLE VALVE	1	DRY
		PRPSSW8D08	E1221W, SINGLE VALVE	1	WASH
		PRPSSW8D09	E1221R	1	DRY, 127V
		PRPSSW8D10	E1221W	1	WASH, 127V
		PRPSSW9D05	E1231R, DOUBLE VALVE	1	DRY
		PRPSSW9D06	E1231W, DOUBLE VALVE	1	WASH
		PRPSSW9D07	E1231R, SINGLE VALVE	1	DRY
		PRPSSW9D08	E1231W, SINGLE VALVE	1	WASH
		PRPSSW9D09	E1231R	1	DRY, 127V
		PRPSSW9D10	E1231W	1	WASH, 127V
G02	RECTOR	52G043J003	DWD-100DR, 8A	1	
G03	BASE U	3610391910	PP, DWD-100DR	1	
G04	UNIT FILTER(EMI K19)	3611908000	220V(FUSE250V, 471+474+10MH)	1	
		3611908010	100V(FUSE125V, 471+474+10MH)	1	
G05	SUPPORTER LEG	3615303600	PO, 3.0T	4	
G06	FIXTURE LEG	3612006400	ABS, DWD-100DR	4	
G07	FOOT	3612100600	BUTYL, DWD-100DR	4	
	SPECIAL BOLT	3616029000	10x1.25, 51mm	4	
G08	HARNESS AS	3612795510	E1211W, DOUBLE VALVE	1	BUBBLE
		3612795515	E1211W, DOUBLE VALVE	1	N/BUBBLE
		3612795550	E1211W, SINGLE VALVE	1	BUBBLE
		3612795555	E1211W, SINGLE VALVE	1	N/BUBBLE
		3612795530	E1221W, DOUBLE VALVE	1	BUBBLE
		3612795535	E1221W, DOUBLE VALVE	1	N/BUBBLE
		3612795570	E1221W, SINGLE VALVE	1	BUBBLE
		3612795575	E1221W, SINGLE VALVE	1	N/BUBBLE
		3612795500	E1211R, DOUBLE VALVE	1	BUBBLE
		3612795505	E1211R, DOUBLE VALVE	1	N/BUBBLE
		3612795540	E1211R, SINGLE VALVE	1	BUBBLE
		3612795545	E1211R, SINGLE VALVE	1	N/BUBBLE
		3612795520	E1221R, DOUBLE VALVE	1	BUBBLE
		3612795525	E1221R, DOUBLE VALVE	1	N/BUBBLE
		3612795560	E1221R, SINGLE VALVE	1	BUBBLE
		3612795565	E1221R, SINGLE VALVE	1	N/BUBBLE

8. TUB AS

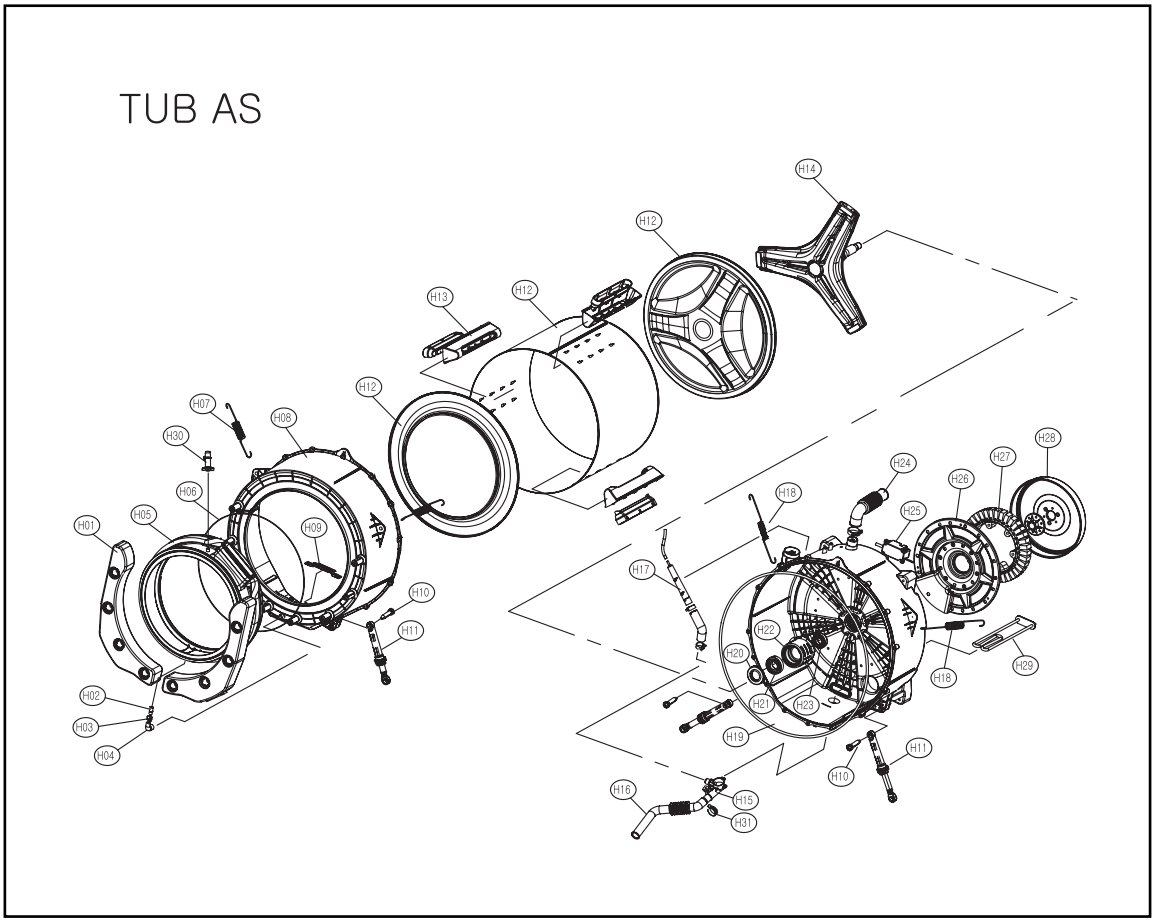
TUB AS
H14
H12
H13
H12
H12
H07
H08
H30
H06
H05
H01
H09
H10
H11
H02
H03
H04
H28
H24
H27
H26
H18
H25
H17
H22
H20
H21
H23
H19
H29
H18
H11
H10
H16
H15
H31

■ Base u as

No.	PARTS NAME	PARTS CODE	DESCRIPTION	Q'TY	REMARK
H01	BALANCER WEIGHT AS	3616106200	6.5kg	1	
H02	PIPE JOINT	3614404900	PP	1	
H03	CLAMP(HODE PIPE)	3611204300	ø14, MFZN	1	
H04	HOSE JOINT	3613266500	EPDM	1	
H05	GASKET	3612320700	EPDM, DRY	1	
		3612321200	EPDM, WASH	1	
H06	CLAMP GASKET AS	3611203600	GASKET	1	
H07	SPRING SUSPENSION F	3615113500	YELLOW	2	
H08	TUB FRONT	3618820401	PP+GF, FH7300GM	1	
H09	FIXTURE HEATER	3612006700	SUS	1	
H10	DAMPER PIN	361A700200	AKS, D=14.5	3	
H11	DAMPER FRICTION	361A700100	70N AKS ST=170-260	3	
H12	DRUM AS	3617003300	11kg	1	
H13	UFT AS	361A400300	11kg	1	
H13	LIFT	361A400600	PP	1	
H14	SPIDER AS	361A300200	11kg	1	
H15	DRAIN HOUSING I	36196TAM00	PP, PUMP	1	
H16	HOSE DRAIN	3613269000	EPDM, PUMP	1	
H17	AIR TRAP AS	3610AAR101	110RP, HOSE+TRAP	1	
H18	SPRING SUSPENSION R	3615113600	BLACK	2	
H19	GASKET TUBE	3612321100	EPDM FORM	1	
H20	WATER SEAL	361A600100	NBR	1	
H21	BEARING INNER	3616303100	6206Z, FAG	1	
H22	BEARING HOUSING	3616303000	ALDC	1	
H23	BEARING OUTER	3616303200	6205Z, FAG	1	
H24	HOSE AIR	3613266300	EPDM	1	
H25	UNIT BUBBLE PUMP	36189L4110	220-240V, 50/60Hz	1	
		36189L4G00	100-130V, 50/60Hz	1	
H26	BASE	3610392000	SECEN	1	
H27	UNIT STATER BLDC	36189L4800	ø256x28H, 36 SLOT, 2SENSOR	1	
H28	UNIT ROTOR BLDC	36189L4900	MAGNET24, SERRATION:3114D02000	1	
H29	HEATER WASH	3612800800	230V 2KW, 24.20HM, 8.6W/SQ	1	
		3612801200	2220V 2KW, 26.450HM, 8.6W/SQ	1	
		3612801500	240V 2KW, 28.80HM, 8.6W/SQ	1	
		3612801100	110V 1KW, 4.3W/SQ SUS	1	
		3612801900	120V, 1KW, 14.4MH, 4.3W/SQ SUS	1	
H30	NOZZLE SHOWER	3618104000	PP	1	
H31	CLAMP HOSE	3611203410	SK5, D+33	1	