DWD-E1200R'S/E1200W'S(S/G)-2 2007.5.15 3:33 PM 페이지61

DAEWOO

SVC MANUAL

DRUM WASHING MACHINE

DWD-E1200R'S

DWD-E1200W'S

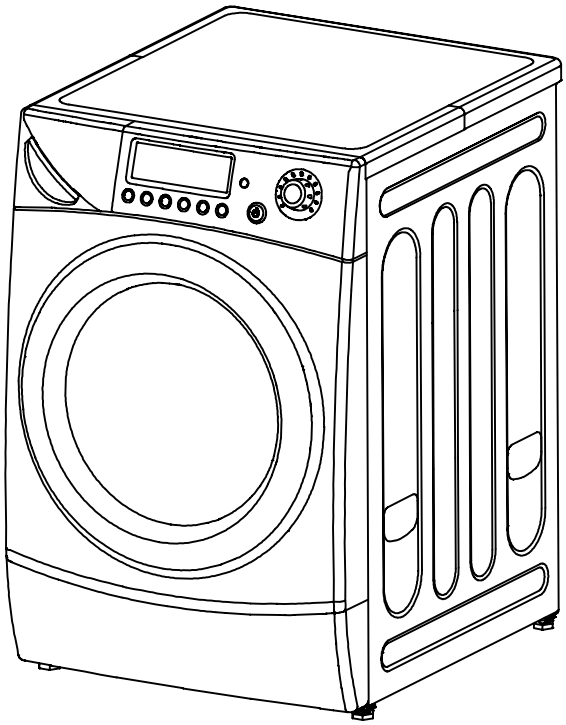

DRUM WASHING MACHINE

2005. 09

DW D-E1200R'S/E1200W'S(S/G)-1 2007.5.15 3:32 PM 페이지1

DRUM WASHING MACHINE SERVICE MANUAL

1. WHAT IS DRUM? 2

2. SPECIFICATION OF DRUM WASHING MACHINE 6

3. VERIFICATION OF DRUM ASSY 7

4. PARTS LIST FOR EACH ASSY 8

5. SEQUENCE CHART OF PCB.....23

6. TROUBLE SHOOTING 32

7. WIRING DIAGRAM 48

8. TROUBLESHOOTING REGARDING DRAIN 56

9. INSTALLATION GUIDE 57

10. ATTENTION POINT WITH SERVICE.....59

1. WHAT IS DRUM ?

1. WHAT IS DRUM WASHER?

One of the famous washers in the globe which uses laundry falling energy.

2. Sales point of our washer

❖ The biggest capacity with compact size

❖ Environmently friendly washer with NANO technology
• Sterilizing up to 99.9%

❖ No damage and entanglement but excellent washability

❖ 4way savings-noise, vibration, washing times, energy

❖ Self-cleaning course of Drum

❖ Good washing performance with heating system

❖ Condensing dry system with saving energy

❖ Sunshine dry effects with infrared x-ray

❖ Big door glass with easy laundry take-in/out

❖ The higest spin speed - 1200rpm

3. THE DIRECT DRIVE SYSTEM OF DRUM WASHING MACHINE

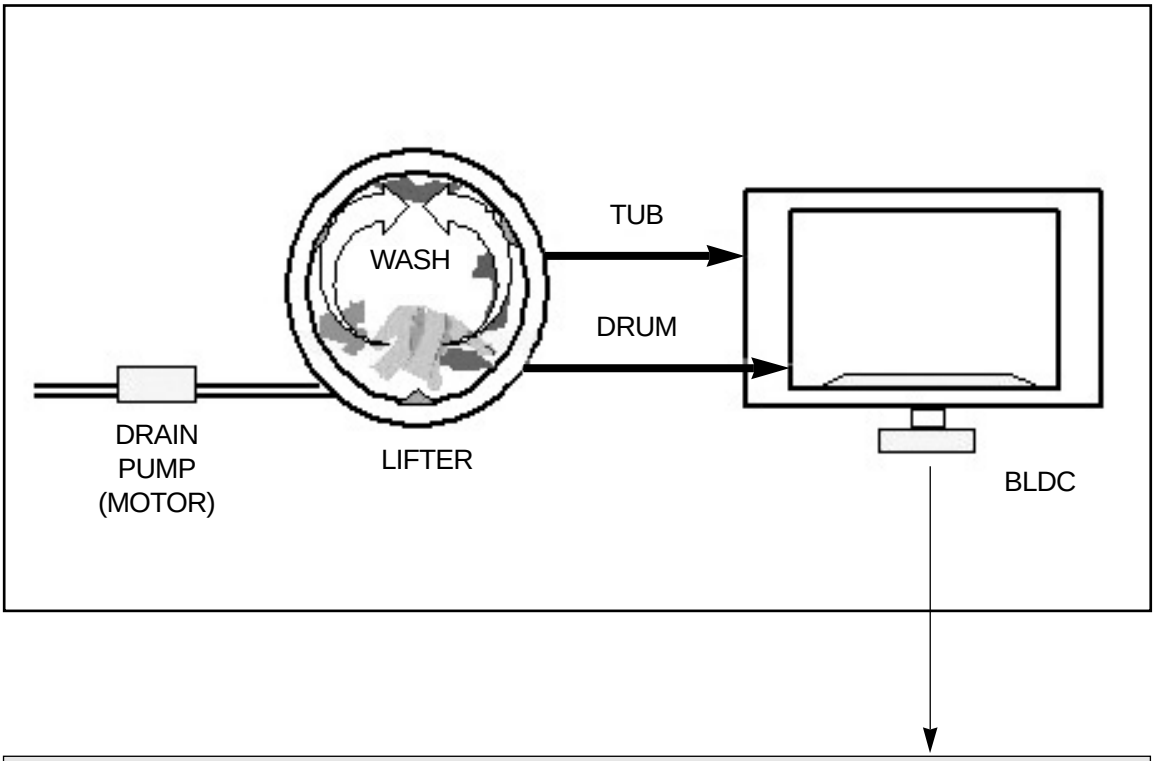

- DD CONTROL : DIRECT DRIVE SYSTEM
- BLDC MOTOR

4. DRIVE SYSTEM

3. INLET PARTS

- COLD : 3-WAY
- COLD, PREWASH, DRY
- COLD : 2-WAY
- COLD, PREWASH

6. DRY PARTS

- HEATER DRY : OPTION
- BLOWER FAN
- FAN MOTOR : BLDC
- THERMISTOR
- THERMOSTAT
  : FUSE, BI-METAL
- CONDENSING SYSTEM
- DRY FAN DRIVE
  → GENERATION OF HEATER'S HEAT
  → TEMP. SENSOR
  → 100°C OFF 90°C ON : OPTION

5. DOOR PARTS

- DOOR LOCK S/W
  : ADDING CLOTHES
- LOCK HINGE
- DOOR AS : GLASS
- GASKET

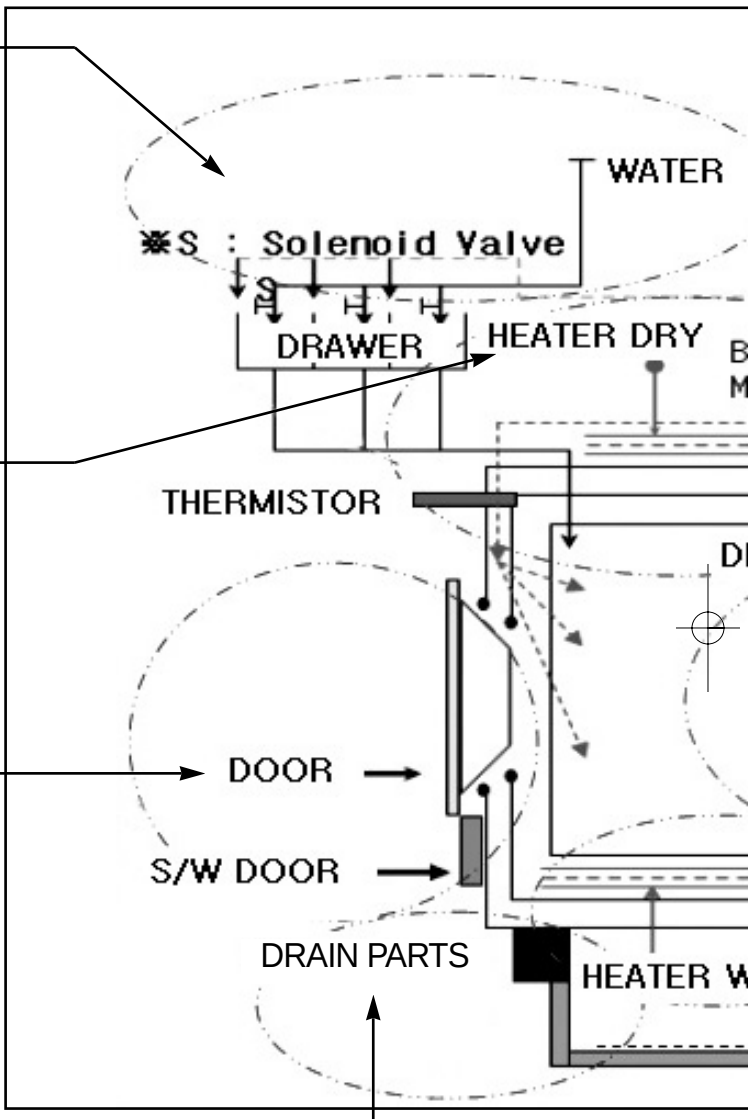

7. DRAIN PARTS

- DRAIN PUMP(MOTOR)
- VALVE HOUSING
- DRAIN HOSE I

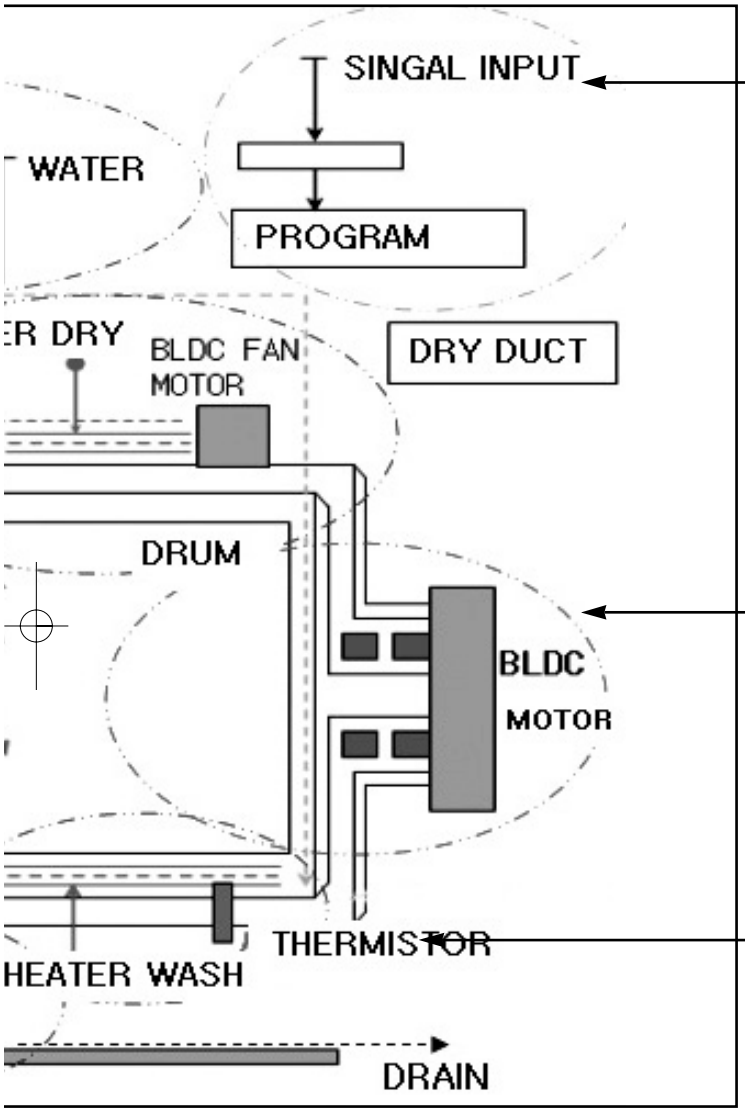

1. CONTROLLER

- MAIN PCB
- FRONT PCB
- HARNESS
- NOISE FILTER
- POWER CORD : 15A

2. DRIVE PARTS

- BLDC MOTOR
- DRUM
- BEARING
- SPIDER/SHAFT
- TUB
- WEIGHT BALANCER

4. WASH HEATING

- WASH HEATER : OPTION
- THERMISTOR
- 40°C FIXED TEMP. CONTROL : OPTION
- 60°C, 90°C BOIL

8. SUPPORTER

- BASE
- DAMPER AS : 3(70N)

DW D-E1200R'S/E1200W'S(S/G)-1 2007.5.15 3:32 PM 페이지5

5. FUNCTION

1. CONTROLLER

(1-1) MAIN PCB
(1-2) FRONT PCB
(1-3) NOISE FILTER

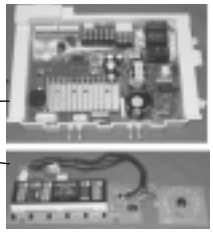

3. INLET PARTS

(3-1) 3-WAY INLET VALVE
(3-1) 2-WAY INLET VALVE
(3-2) 1-WAY INLET VALVE (HOT)
(3-3) INLET BOX AS

2. PARTS for DRIVING

(2-1) LIFTER AS
(2-2) GASKET
(2-3) WEIGHT BALANCER
(2-4) ROTOR
(2-5) STATOR
(2-6) SHAFT
(2-7) BEARING
(2-8) SPIDER
(2-9) DRUM
(2-10) TUB
(2-11) BASE

BLDC MOTOR

PARTS for TRANMITTING

4. DOOR AS

(4-1) GLASS DOOR
(4-2) HINGE DOOR
(4-3)DOOR LOCK S/W

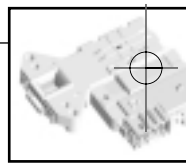

5. DRY : DUCT B AS

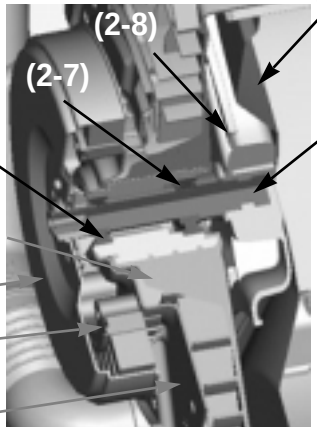

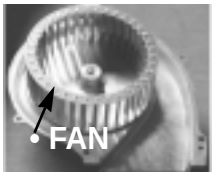

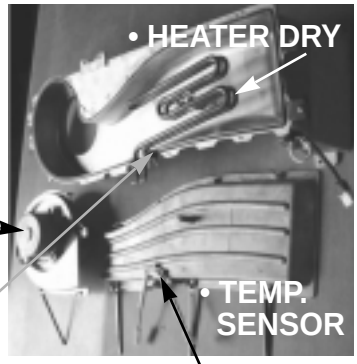

6. WASH HEATING

• WASH HEATER
• THERMISTOR

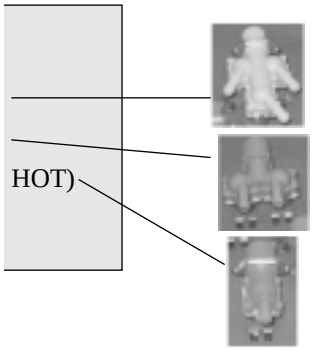

7. DRAIN

(7-1) PUMP AS
(7-2) HOSE DRAIN I
(7-3) HOSE DRAIN

8. SUPPORTER

(8-1) BASE U
(8-2) DAMPER AS : 3(70N)
(8-3) SPRING :
FRONT - 2 (BLACK)
REAR - 2 (YELLOW)

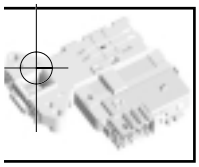

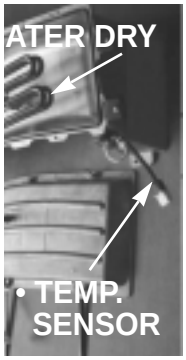

EMP. FUSE

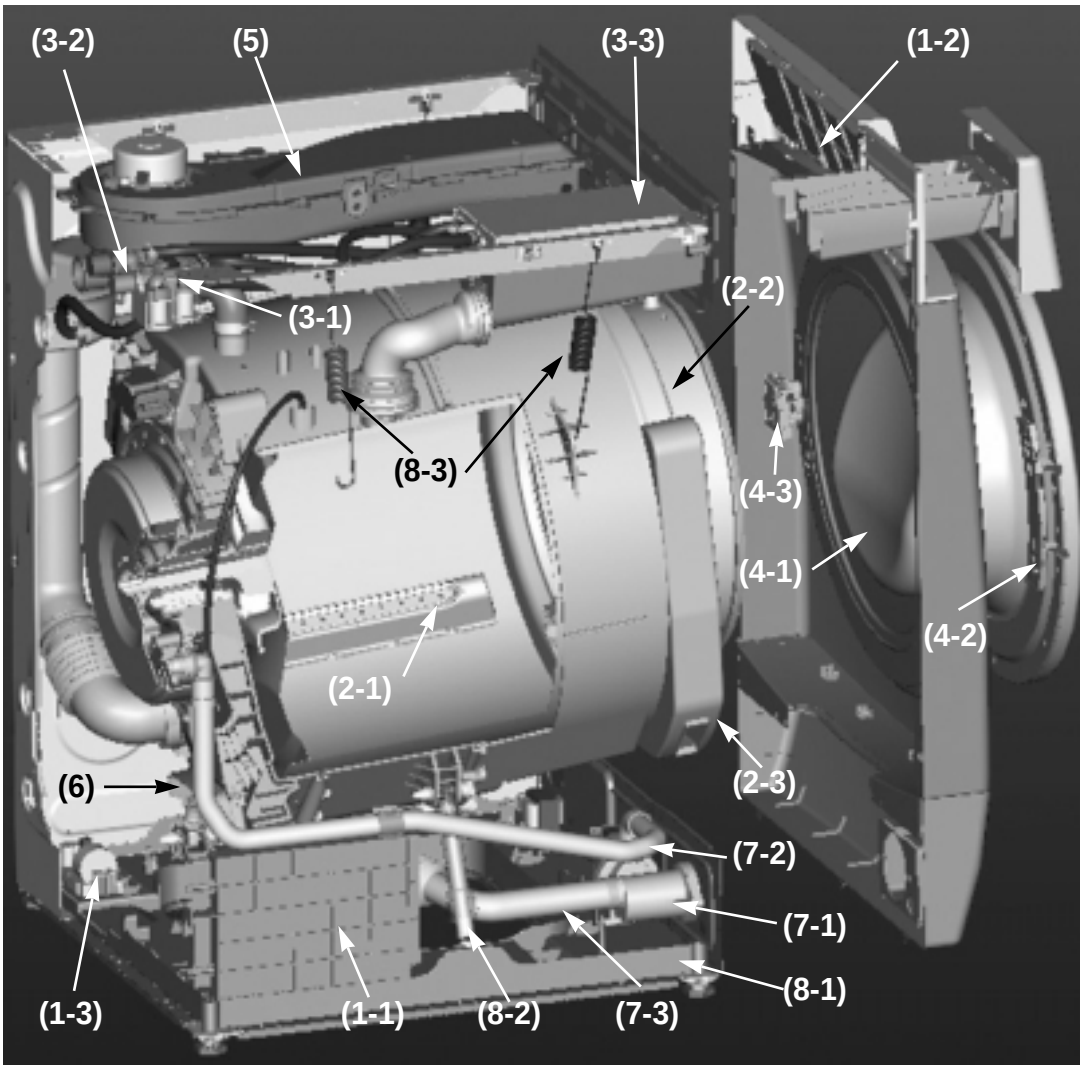

2. DRUM WASHING SPECIFICATION OF MACHINE

1. PANEL TYPE 1

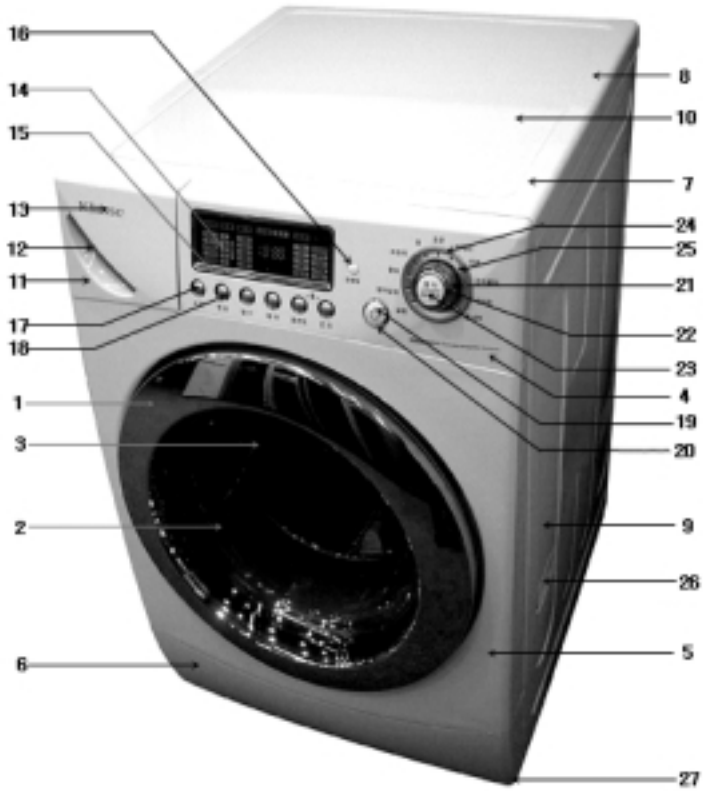

NO	PARTS NAME
1	FRME DOOR O
2	DOOR WINDOW
3	DCD STICKER
4	PANEL LOWER
5	CABINET FRONT
6	PANEL LOWER
7	FRAME TOP F
8	FRAME TOP R
9	CABINET
10	PLATE TOP
11	CASE HANDLE
12	HANDLE CAP
13	BADGE
14	WINDOW DISPLAY
15	DECO. WINDOW
16	BUTTON DOOR UNLOCK
17	BUTTON FUNCTION
18	DECO. FUNCTION
19	PLATE DISPENSER
20	BUTTON POWER
21	BUTTON DIAL OUT
22	BUTTON DIAL IN
23	BUTTON DIAL IN
24	HOLDER COURSE IN
25	HOLDER COURSE OUT
26	HANDLE CABINET
27	BASE UNDER

DIMENSION(WxDxH)		630mm(W) x 755mm(D) x 950mm(H)
MACHINE WEIGHT		90 / 85kg
WATER CONSUMPTION		WASH 130 ℓ / DRY 28 ℓ
WASHING CONSUMPTION		32 ℓ
POWER SOURCE		Option
POWER CONSUMPTION	WASHING	1100W (Heating) ~ 2400W : Option
	DRY	1250W ~2400W : Option
CAPACITY	WASHING	11 kg (Domestic)
	SPIN	11 kg (Domestic)
	DRY	6.5 kg (Domestic)
WASHING TYPE		DRUM TYPE
DRY TYPE		Digital condensing dry system
OPERATION WATER PRESSURE		29kPa ~ 784kPa(0.3kgf/cm^2~8kgf/cm^2)

3. VERIFICATION OF DRUM ASSY

(1) INLET BOX ASSY

(7)

(2) PANEL F ASSY

Luxury

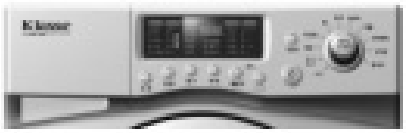

Midium

Economy

(3) CABINET F ASSY

(5) TUB AS

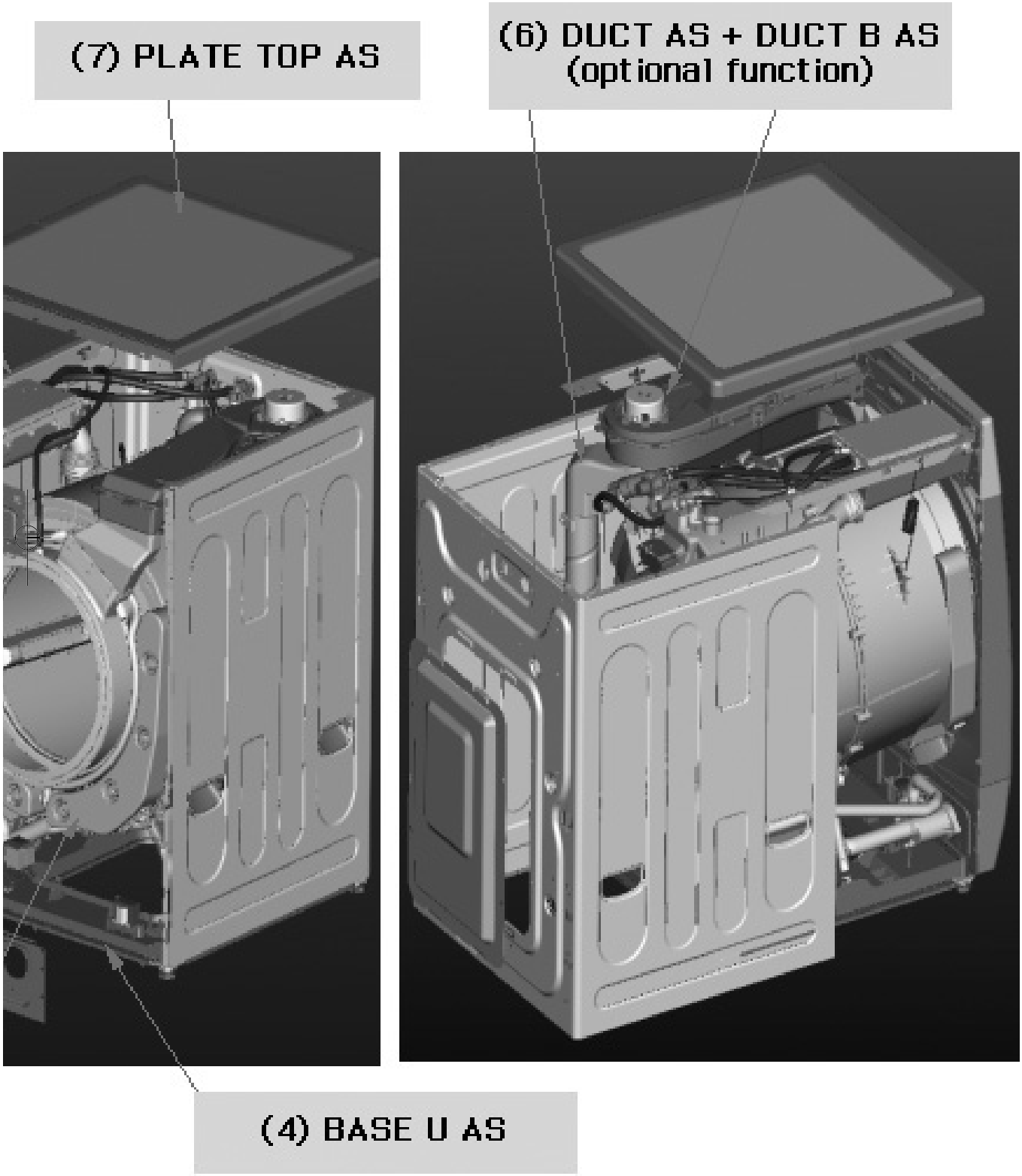
(7) PLATE TOP AS
(6) DUCT AS + DUCT B AS
(optional function)
(4) BASE U AS

4. PARTS LIST FOR EACH ASSY

1. PLATE T, PANEL LOWER AS

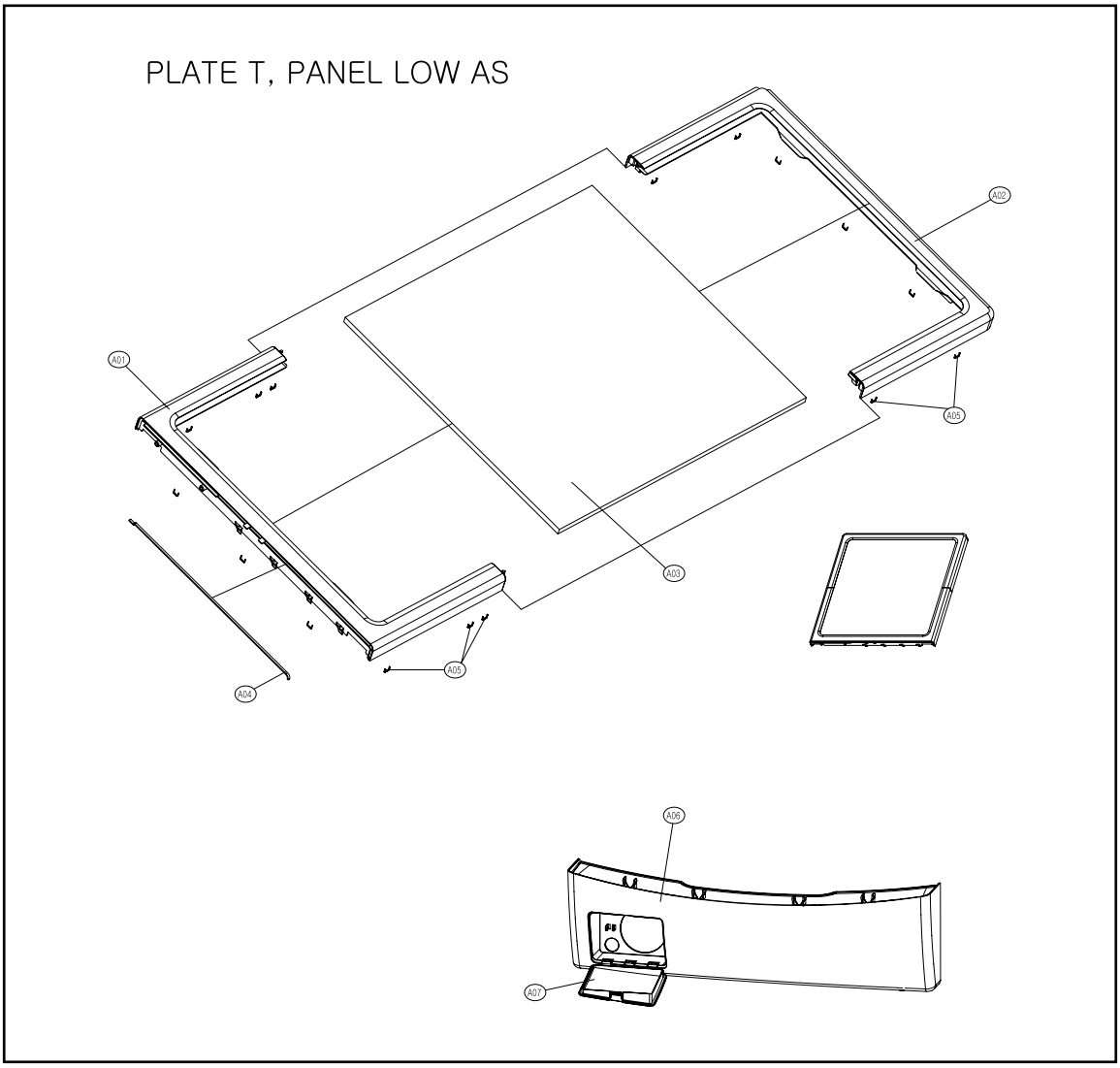

No.	PARTS NAME	PARTS CODE	DESCRIPTION	Q'TY	REMARK
A01	FRAME PLATE F	3612204400	HIPS	1	
A02	FRAME PLATE REAR	3612204500	HIPS	1	
A03	PLATE TOP	3614531600	WOOD	1	
A04	PAD CUSHION	3614110500	SPONGE	1	
A05	FIXTURE PLATE T	3612007100	STAPLE(8x10)	1	
	SCREW TAPPING	7122401411	T2S TRS 4x14 MFZN	2	
A06	PANEL LOWER	3614284200	HIPS	1	
A07	COVER PRMP	3611426400	HIPS	1	

2. PANEL F AS(Luxury)

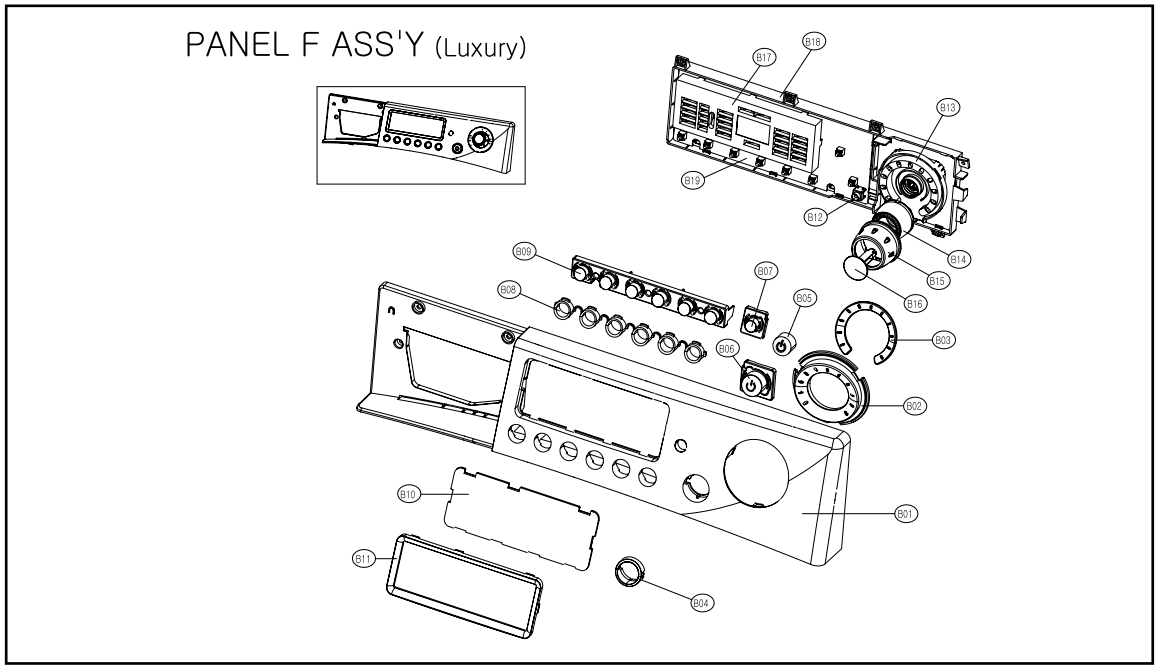

No.	PARTS NAME	PARTS CODE	DESCRIPTION	Q'TY	REMARK
B01	PANEL F	3614282200	ABS	1	
B02	HOLDER COURSE OUT	3613049000	ABS, GUILDING_BASE	1	
B03	HOLDER COURSE IN	3613048900	ABS(TR558)	1	
B04	DECORATOR POWER	3611631000	ABS, UV_BASE	1	
B05	BUTTON POWER IN	3616602800	ABS	1	
B06	BUTTON POWER OUT	3616602900	ABS(TR558)	1	
B07	BUTTON DOOR LOCK	3616602600	ABS	1	
B08	DECORATOR FUNCTION	3611630900	ABS, GILDING_BASE	1	
B09	BUTTON FUNCTION	3616602700	ABS, UV_BASE	1	
	SCREW TAPPING	7121301508	T2S PAN 3x15 MFNI	3	
B10	WINDOW DISPLAY	3615502700	ABS(TR558)	1	
B11	DECORATOR WINDOW	3611630800	ABS, GILDING_BASE	1	
B12	HOLDER POWER	3613048800	ABS(TR558)	1	
B13	HOLDER COURSE MAIN	3613049100	ABS	1	
B14	BUTTON DIAL MIDDLE	3616602400	ABS, GILDING_BASE	1	
B15	BUTTON DIAL OUT	3616602500	ABS(TR558)	1	
B16	BUTTON DIAL IN	3616602300	ABS, GILDING_BASE	1	
B17	CUSTOM LED	3613014400	ABS	1	
B18	CASE PCB FRONT	3611139600	HIPS	1	
B19	PCB	PRPSSWID15	E1211R/P	1	DRY
		PRPSSWID16	E1211W/P	1	WASH
	SCREW TAPPING	7122401411	T2S TRS 4X14 MFZN	7	

■ Mid

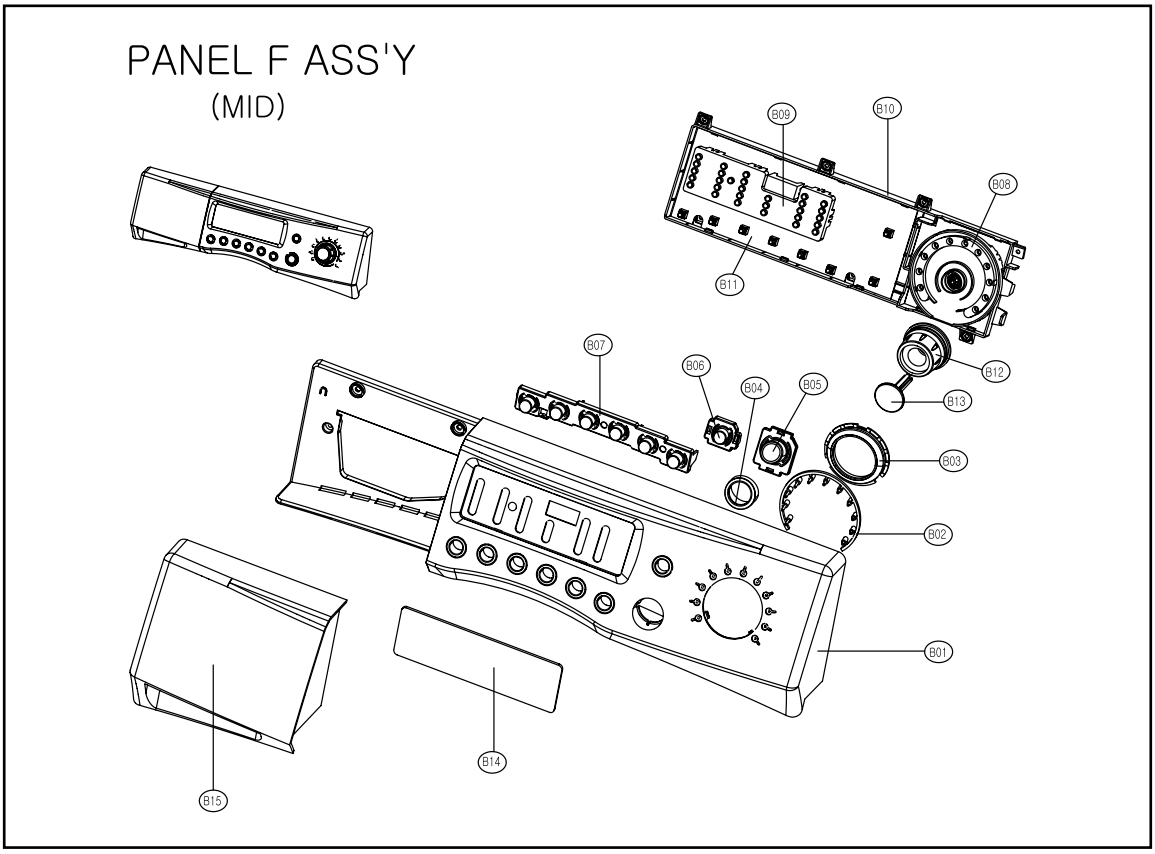

No.	PARTS NAME	PARTS CODE	DESCRIPTION	Q'TY	REMARK
B01	PANEL F	3614282300	ABS	1	
B02	WINDOW LED COURSE	3615502900	ABS(BK 8410AT)	1	
B03	DECORATOR DIAL	3613049400	ABS	1	
B04	DECORATOR BUTTON POWER	3611631100	ABS	1	
B05	BUTTON POWER	3616603100	ABS	1	
B06	BUTTON DOOR OPEN	3616603200	ABS	1	
B07	BUTTON FUNCTION	3616603000	ABS	1	
	SCREW TAPPING	7121301208	T2S PAN 3x12 SUS	3	
B08	HOLDER LED COURSE	3613049300	ABS	1	
B09	HOLDER LED CUSTOM	3613049200	ABS	1	
B10	CASE PCB F	3611139600	HIPS	1	
	SCREW TAPPING	7122401411	T2S TRS 4x14 MFZN	7	
B11	PCB	PRPSSW2D10	–	1	
B12	SUTTON DIAL OUT	3616603400	ABS	1	
B13	BUTTON DIAL IN	3616603300	ABS	1	
B14	WINDOW DISPLAY	3615502800	ABS(BK 8410AT)	1	
B15	CASE HANDLE	3611139700	ABS	1	INLETBOX AS

■ ECONOMY

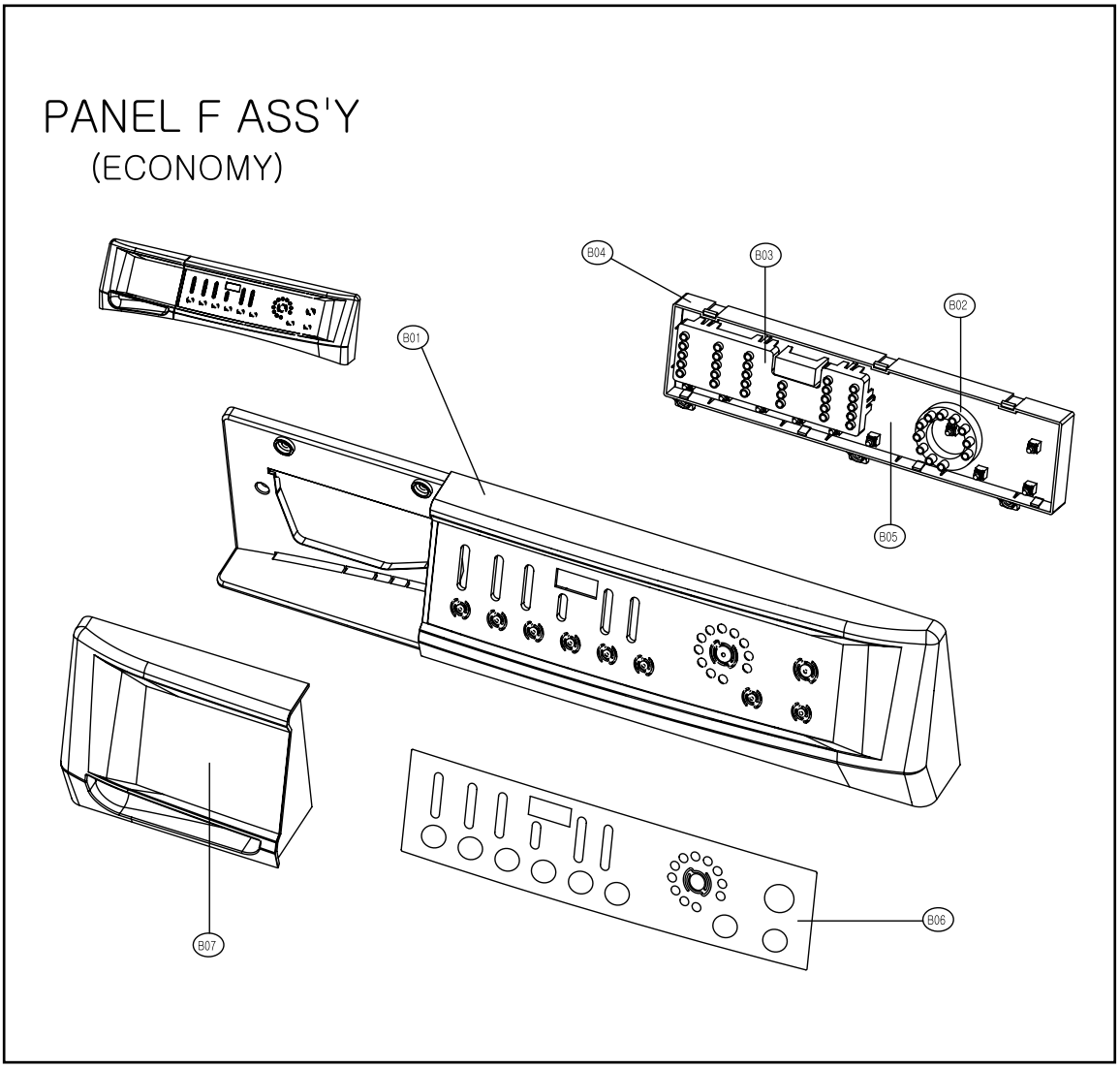

No.	PARTS NAME	PARTS CODE	DESCRIPTION	Q'TY	REMARK
B01	PANEL F	3614282400	ABS	1	
B02	HOLDER LED COURSE	3613049500	ABS	1	
B03	HOLDER LED CUSTOM	3613049200	ABS	1	
B04	CASE PCB F	3611139900	HIPS	1	
B05	PCB	PRPSSW4D10	–	1	
	SCREW TAPPING	7122401411	T2S TRS 4x14 MFZN	3	
B06	DECORATOR FILM	3611632600	PC FILM	1	
B07	CASE HANDLE	3611139800	ABS	1	INLETBOX AS

3. CABINET F AS

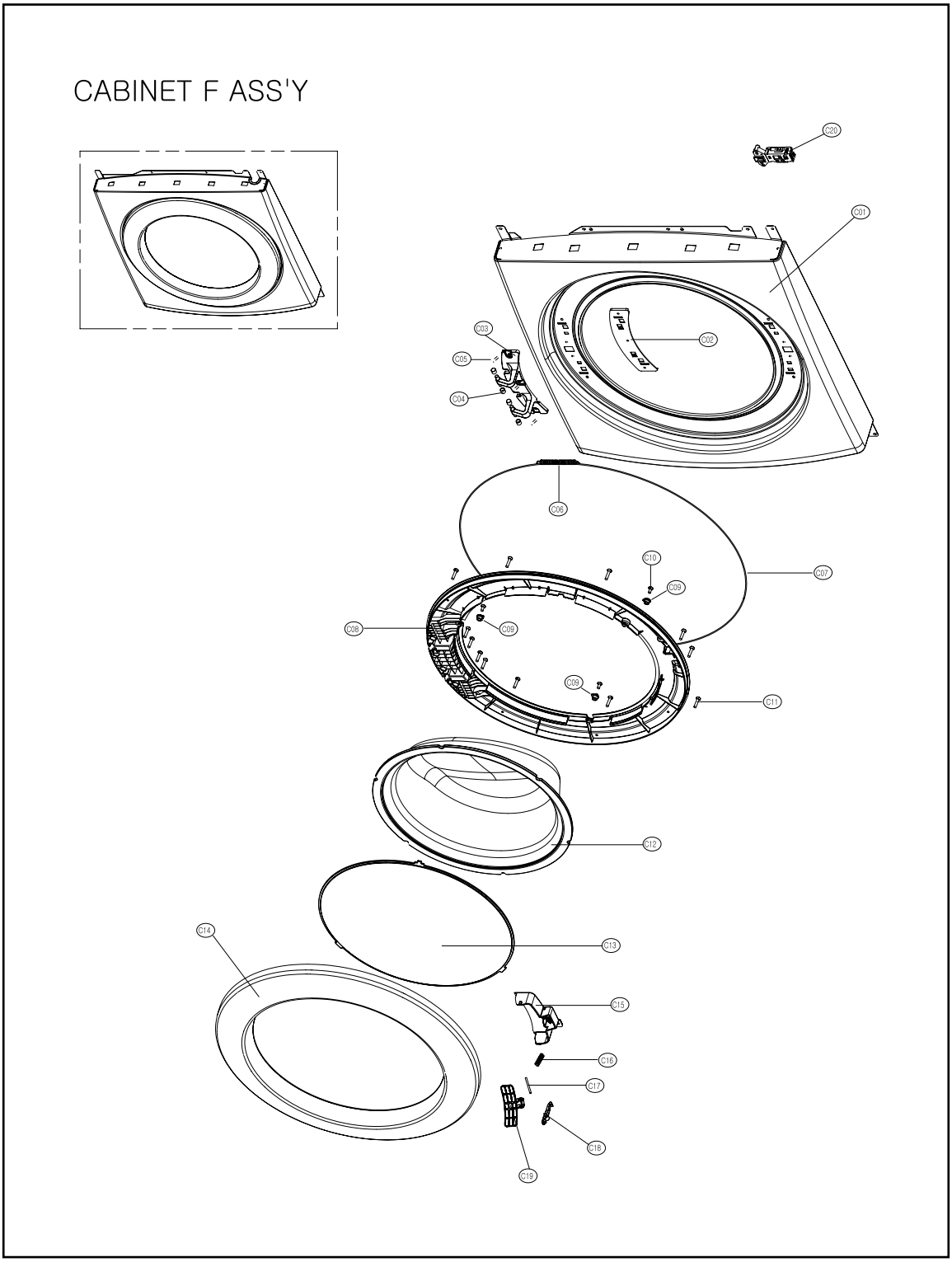

No.	PARTS NAME	PARTS CODE	DESCRIPTION	Q'TY	REMARK
C01	CABINET F	3610811000	SECD, 0.8t	1	
C02	PLATE HINGE SUPPORT	3614531500	SPG, 1.6t	1	
C03	HINGE DOOR	3612902700	ALDC	1	
C04	CAP HINGE DOOR	3610916500	POM	1	
C05	SCREW TAPPING	3616030000	F/L BOLT(SE) 5x12 SUS	3	
C06	SPRING DOOR	3615113800	D=1.0, N=7	1	
C07	CLAMP DOOR	3611204200	HWSR3, D=1.4	1	
C08	FLAME DOOR I	3611204700	PP	1	
C09	STOPPER DOOR	3615202300	PP	3	
C10	SCREW TAPPING	7122401608	T2S TRS 4x16 SUS	2	
C11	SCREW TAPPING	7115402008	T1S FLT 4x20 SUS430 NATURAL	15	
C12	DOOR GLASS	361A110600	GLASS(DWD-100DR)	1	
C13	PROTECTOR GLASS	3618304201	ABS TRANSPATENT	1	
C14	FRAME DOOR O	3612204600	ABS	1	CR
C15	COVER HANDLE	3611425620	ABS	1	CR
C16	SPRING HOOK	3615113700	SUS, ID=3, NI=7, D=ø0.9	2	
C17	PIN HANDLE	3618200100	SUS, D=3.0, L=39	1	
C18	HOCK DOOR	3613100700	Zn-DC	1	
C19	HANDLE DOOR	3612608200	ABS	1	
C20	SWITCH DOOR LOCK	3619046410	DF F11 110 125V 16A	1	
		3619046400	DF F01 007 220V 16A	1	

4. INLET BOX AS

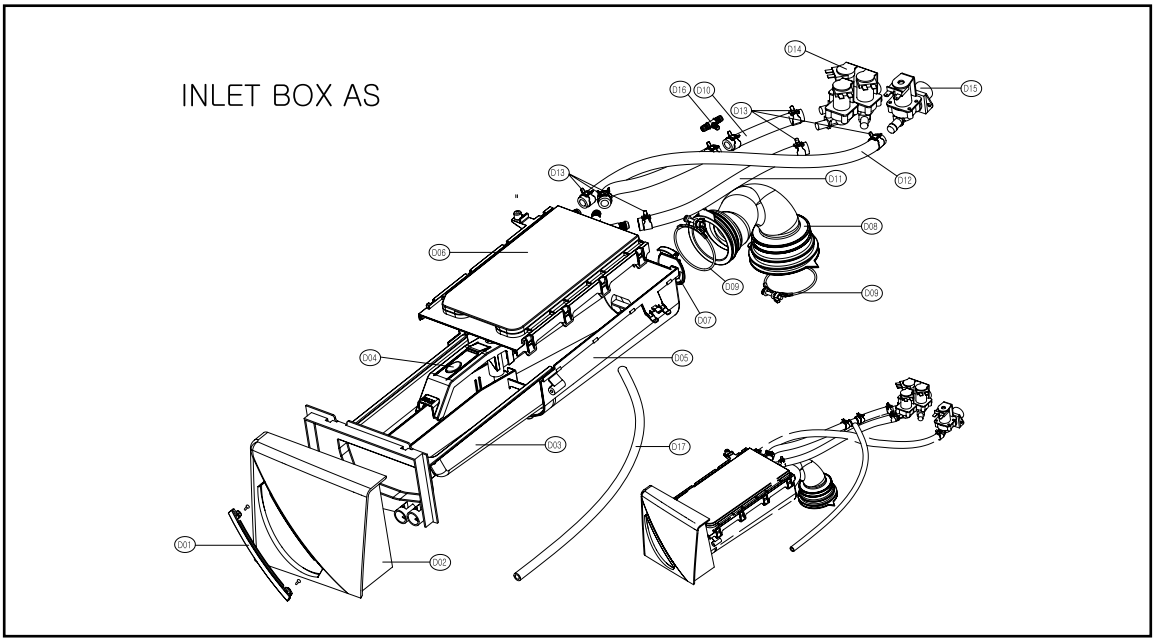

No.	PARTS NAME	PARTS CODE	DESCRIPTION	Q'TY	REMARK
D01	HANDLE CAP	3612608300	ABS	1	Luxury
D02	CASE HANDLE	3611139400	ABS	1	Luxury
	SCREW TAPPING	7121301208	T2S PAN 3x12 SUS	2	HANDLE CAP
D03	CASE DETERGENT	3611139500	PP	1	
D04	CAP SOFTENER	3610916600	PP	1	
D05	INLETBOX	3617505300	PP	1	
D06	NOZZLE AS	3618103500	PP, DWD-100DR	1	TOP+UNDER
D07	PACKING	3614010000	EPDM	1	
D08	HOSE INLET	3613266400	EPDM	1	
D09	CLAMP AS	3611203200	ID=60, WIRE+GUIDE+BOLT+NUT	1	INLET BOX/TUB R
D10	HOSE C	3613267010	EPDM, ID=10, OD=16, L=165mm	2	PRE WASH
D11	HOSE A	3613266600	EPDM, ID=10, OD=16, L=335mm	1	MAIN WASH
D12	HOSE B	3613266700	EPDM, ID=10, OD=16, L=420mm	1	HOT
D13	CLAMP SPRING	3611203800	ID=15.5, T=0.6, B=10	8	
D14	VALVE INLET	3615415900	100/130V, 3WAY, PP/BRACKET	1	COLD
		3615415000	220/240V, 50/60Hz, 3WAY	1	COLD
		3615415010	220/240V, 3WAY, NYLON/BRACKET	1	COLD, VDE
		3615415800	100/130V, 2WAY, PP/BRACKET	1	COLD
		3615414900	220/240V, 50/60Hz, 2WAY	1	COLD
		3615414910	220/240V, 2WAY, NYLON/BRACKET	1	COLD, VDE
D15	VALVE INLET	3615415700	100/130V, 1WAY, PP/BRACKET		HOT
		3615414800	220/240V, 1WAY, PP/BRACKET		HOT
		3615414810	240V, 1WAY, PP/BRACKET	1	HOT-AUS
D16	PIPE JOINT	3614413300	PP	1	
D17	HOSE SHOWER	3613270100	EPDM, ID=8.5, OD=12.5, L=620	1	

5. DUCT + DUCT PIPE AS

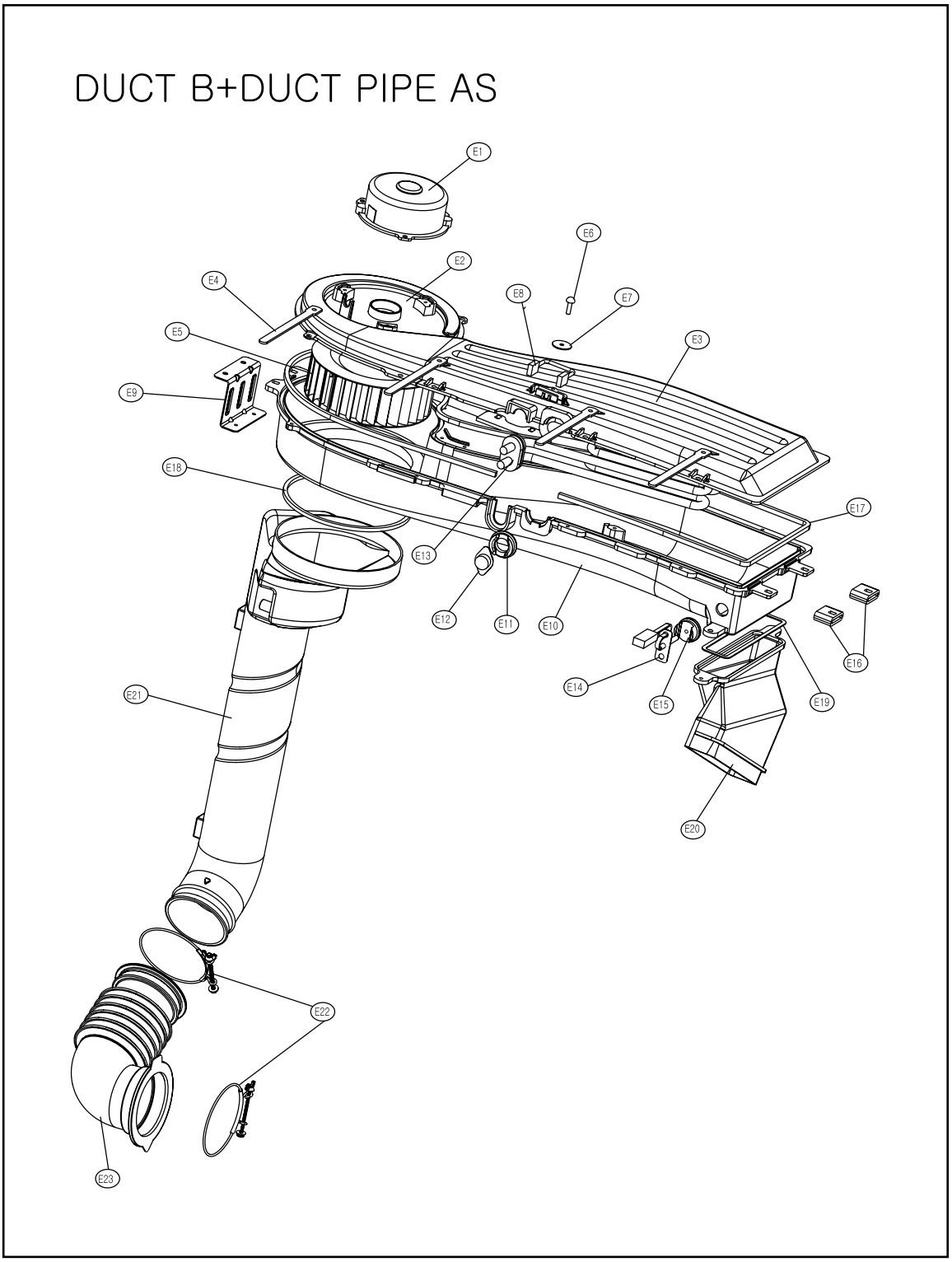

■ Duct + Duct pipe as

No.	PARTS NAME	PARTS CODE	DESCRIPTION	Q'TY	REMARK
E01	UNIT FAN MOTOR	36189L3Z41	ISM-77806DWWA, 24V CW 8P 14W	1	
		36189L3820	ISM-77806DWWA, 24V CW 8P 14W	1	
E02	COVER DUCT	3611426600	PBT+GF30%	1	
E03	DUCT B UPPER	361A200200	AL, 2.5T, DWD-100DR	1	
E04	CLAMP CORD	3611203330	DABE-1, A=9, B=5.3, L=105	4	
E05	FAN AS	3611885700	Ø133x45L IMPELLER	1	
		3611883900	Ø133FAN, NYLON66	1	
E06	SCREW TAPPING	7122400811	T2S TRS 4x8 MFZN	3	
E07	WASHER PLAN	7400432011	PW4.3x20xIT	1	
E08	FUSE TEMPERATURE	361A800120	120°C DF-128S 15A 250V VDE	1	
E09	FRAME HEATER FRANGE	3612204100	SBHG 1.0T	1	
E10	DUCT B THERMOSTAT	361A200100	AL	1	
E11	PACKING THERMOSTAT	3614009900	SILICON	1	
E12	SWITCH THERMOSTAT	3619046500	ON 120°C, OFF 150°C 230V	1	
E13	HEATER DRY	3612800900	220V 210W, 23.050HM, 6.1W/SQ	1	
		3612801400	230V 2.1KW, 25.190HM, 6.1W/SQ	1	
		3612801600	240V 2.1KW, 27.430HM, 6.1W/SQ	1	
		3612801300	110V, 1.2KW, 10.080HM, 3.5W/SQ	1	
		3612801800	120V 1.2KW, 120MH 3.5W/SQ	1	
E14	THERMISTOR DRY	361AAAAC00	R40=26.065k, R90=4.4278k	1	
E15	PACKING RUBBER	3614009800	SILICON, DWD-100DR	1	
E16	CUSHION DRY	3611562800	NBR, DWD-100DR	2	
E17	GASKET SEAL A	3612320820	DWD-110RP, O TYPE ø5, L=1385	1	
E18	GASKET SEAL B	3612320830	EPDM FOAM L=415, ø5	1	
E19	GASKET INLET	3612320900	DWD-100DR	1	
E20	DUCT GUIDE	361A201000	ALDC, DWD-110RP	1	
E21	DUCT PIPE AS	361A200700	11kg	1	

6. CABINET AS

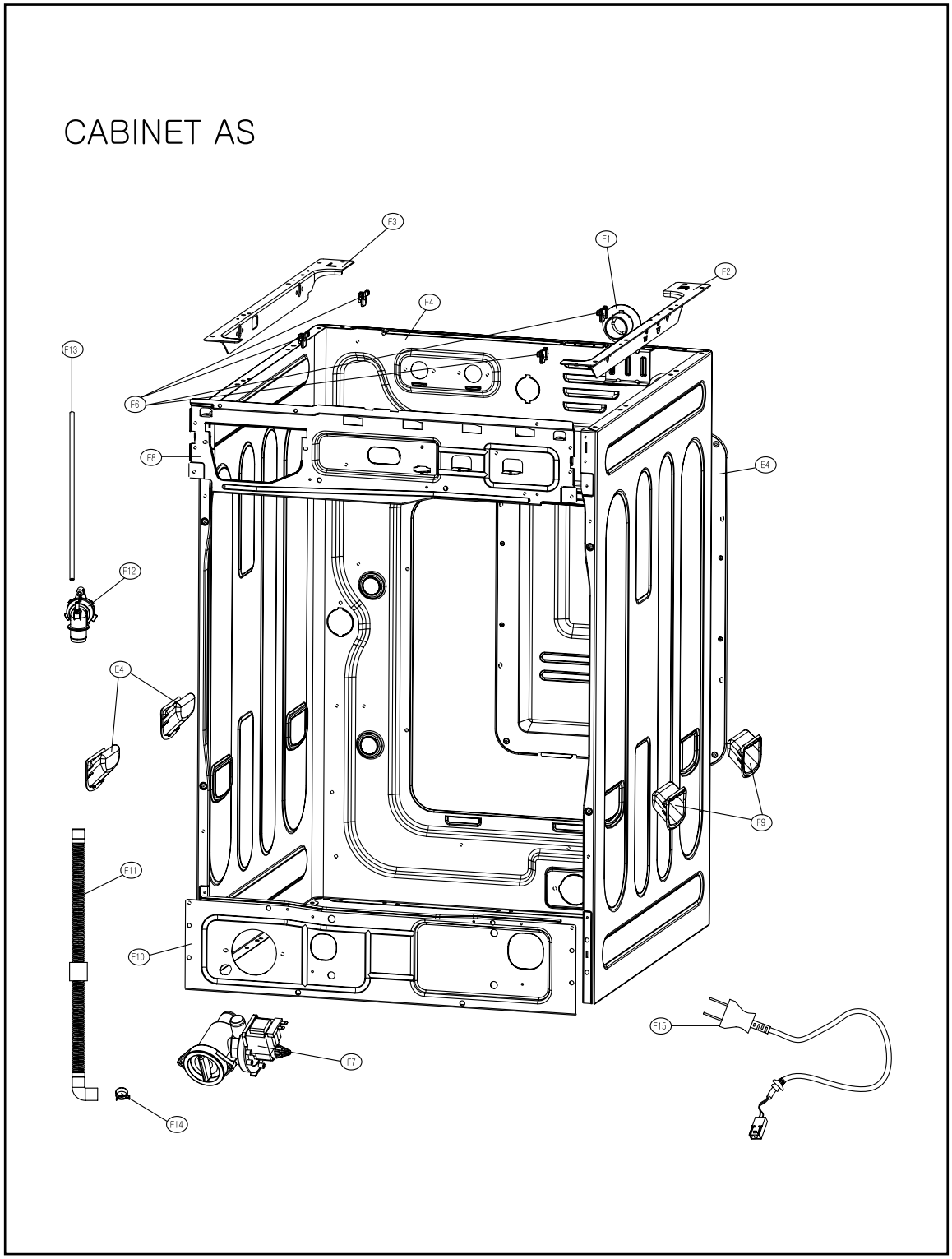

■ Cabinet As

No.	PARTS NAME	PARTS CODE	DESCRIPTION	Q'TY	REMARK
F01	NOZZLE AIR	3618103110	PP, DWD-100DR	1	
F02	FRAME TOP R	3612204300	GI, 1.6T, DWD-100DR	1	
F03	FRAME TOP L	3612204900	GI, 1.6T, DWD-100DR	1	
F04	CABINET	3610810900	SGCC 0.8T, PANTING, DWD-100DR	1	
F05	COVER BACK AS	3611425510	COVER BACK_PAD	1	
F06	STOPPER SPRING	3615202200	POM, DWD-100DR	4	
F07	UNIT DRAIN PUMP AS	36189L4F00	220~240/50Hz, B20-6	1	
		36189L4E00	220/60Hz, B20-5	1	
		36189L4D00	110~130/50/60Hz, B20-3	1	
F08	FRAME UPPER	3612204000	SBHG 1.2T, DWD-100DR	1	
F09	HANDLE CABINET	3612608100	PP, DWD-100DR	1	
F10	FRAME LOWER	3512204200	SBHG 1.2T, DWD-100DR	1	
F11	HOSE DRAIN I	3613269500	ST+EL, 840M	1	
F12	CUFF DRAIN HOSE	3616802600	PP, PUMP	1	
F13	HOSE SIPHON	3613269600	EPDM	1	
F14	CLAMP HOSE	3611204700	D=27	1	
F15	CORD POWER AS	3611339910	H05VV-F, 1.5SQx3C, 250V16A	1	EU-2PIN
		3611339930	H05VV-F, 1.5SQ, 250V16A, FERRITE	1	EU-2PIN
		3611339510	250V15A, IEC53, 1.5SQx3C	1	CP-2PIN
		3611339310	H05VV-F, 1.5SQx3C, 250V16A		CP-2PIN
		3611339810	VCTFK 2C 15A 125V	1	F-2PIN
		3611340910	H05VV-F, 1.0SQx3C, 250V16A	1	ISRAEL
		3611340710	H05VV-F, 1.5SQx3C, 250V15A	1	BS1363A
		3611340310	H05VV-F, 1.5SQx3C, 250V16A	1	BS1363A
		3611339710	H05VV-F, 1.5SQx3C, 250V15A	1	AUS
		3611340110	H05VV-F, 1.5SQx3C, 250V10A	1	AUS
		3611340010	H05VV-F, 1.5SQx3C, 250V	1	AUS
		3611340610	H05VV-F, 1.5SQx3C, 250V10A	1	S.AFRICA
		3611340410	16AWG 125V13A, #1806 3P	1	U.S.A

7. BASE U AS

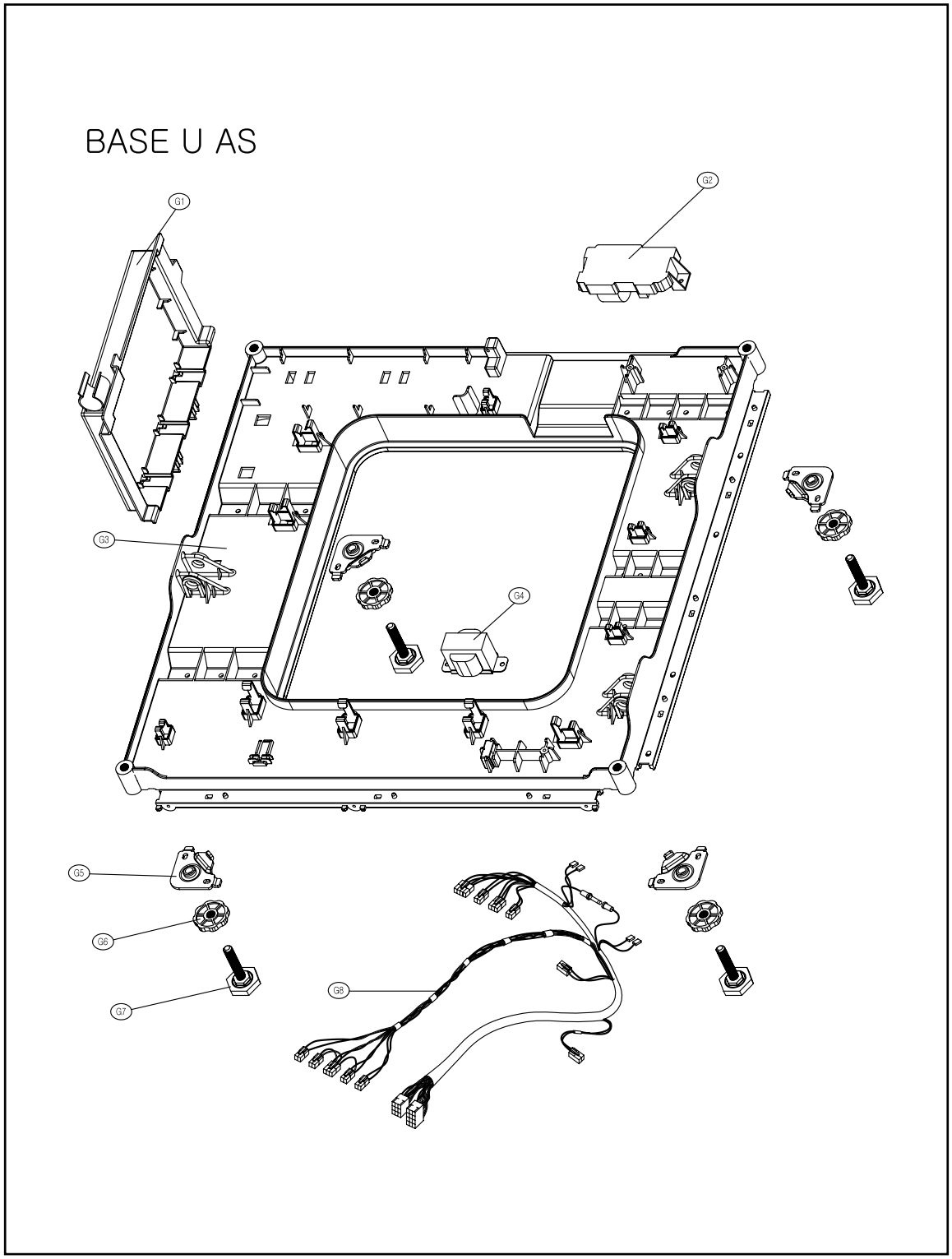

■ Base u as

No.	PARTS NAME	PARTS CODE	DESCRIPTION	Q'TY	REMARK
G01	PCB AS	PRPSSW7D05	E1211R, DOUBLE VALVE	1	DRY
		PRPSSW7D06	E1211W, DOUBLE VALVE	1	WASH
		PRPSSW7D07	E1211R, SINGLE VALVE	1	DRY
		PRPSSW7D08	E1211W, SINGLE VALVE	1	WASH
		PRPSSW7D09	E1211R	1	DRY, 127V
		PRPSSW7D10	E1211W	1	WASH, 127V
		PRPSSW8D05	E1221R, DOUBLE VALVE	1	DRY
		PRPSSW8D06	E1221W, DOUBLE VALVE	1	WASH
		PRPSSW8D07	E1221R, SINGLE VALVE	1	DRY
		PRPSSW8D08	E1221W, SINGLE VALVE	1	WASH
		PRPSSW8D09	E1221R	1	DRY, 127V
		PRPSSW8D10	E1221W	1	WASH, 127V
		PRPSSW9D05	E1231R, DOUBLE VALVE	1	DRY
		PRPSSW9D06	E1231W, DOUBLE VALVE	1	WASH
		PRPSSW9D07	E1231R, SINGLE VALVE	1	DRY
		PRPSSW9D08	E1231W, SINGLE VALVE	1	WASH
		PRPSSW9D09	E1231R	1	DRY, 127V
		PRPSSW9D10	E1231W	1	WASH, 127V
G02	RECTOR	52G043J003	DWD-100DR, 8A	1	
G03	BASE U	3610391910	PP, DWD-100DR	1	
G04	UNIT FILTER(EMI K19)	3611908000	220V(FUSE250V, 471+474+10MH)	1	
		3611908010	100V(FUSE125V, 471+474+10MH)	1	
G05	SUPPORTER LEG	3615303600	PO, 3.0T	4	
G06	FIXTURE LEG	3612006400	ABS, DWD-100DR	4	
G07	FOOT	3612100600	BUTYL, DWD-100DR	4	
	SPECIAL BOLT	3616029000	10x1.25, 51mm	4	
G08	HARNESS AS	3612795510	E1211W, DOUBLE VALVE	1	BUBBLE
		3612795515	E1211W, DOUBLE VALVE	1	N/BUBBLE
		3612795550	E1211W, SINGLE VALVE	1	BUBBLE
		3612795555	E1211W, SINGLE VALVE	1	N/BUBBLE
		3612795530	E1221W, DOUBLE VALVE	1	BUBBLE
		3612795535	E1221W, DOUBLE VALVE	1	N/BUBBLE
		3612795570	E1221W, SINGLE VALVE	1	BUBBLE
		3612795575	E1221W, SINGLE VALVE	1	N/BUBBLE
		3612795500	E1211R, DOUBLE VALVE	1	BUBBLE
		3612795505	E1211R, DOUBLE VALVE	1	N/BUBBLE
		3612795540	E1211R, SINGLE VALVE	1	BUBBLE
		3612795545	E1211R, SINGLE VALVE	1	N/BUBBLE
		3612795520	E1221R, DOUBLE VALVE	1	BUBBLE
		3612795525	E1221R, DOUBLE VALVE	1	N/BUBBLE
		3612795560	E1221R, SINGLE VALVE	1	BUBBLE
		3612795565	E1221R, SINGLE VALVE	1	N/BUBBLE

8. TUB AS

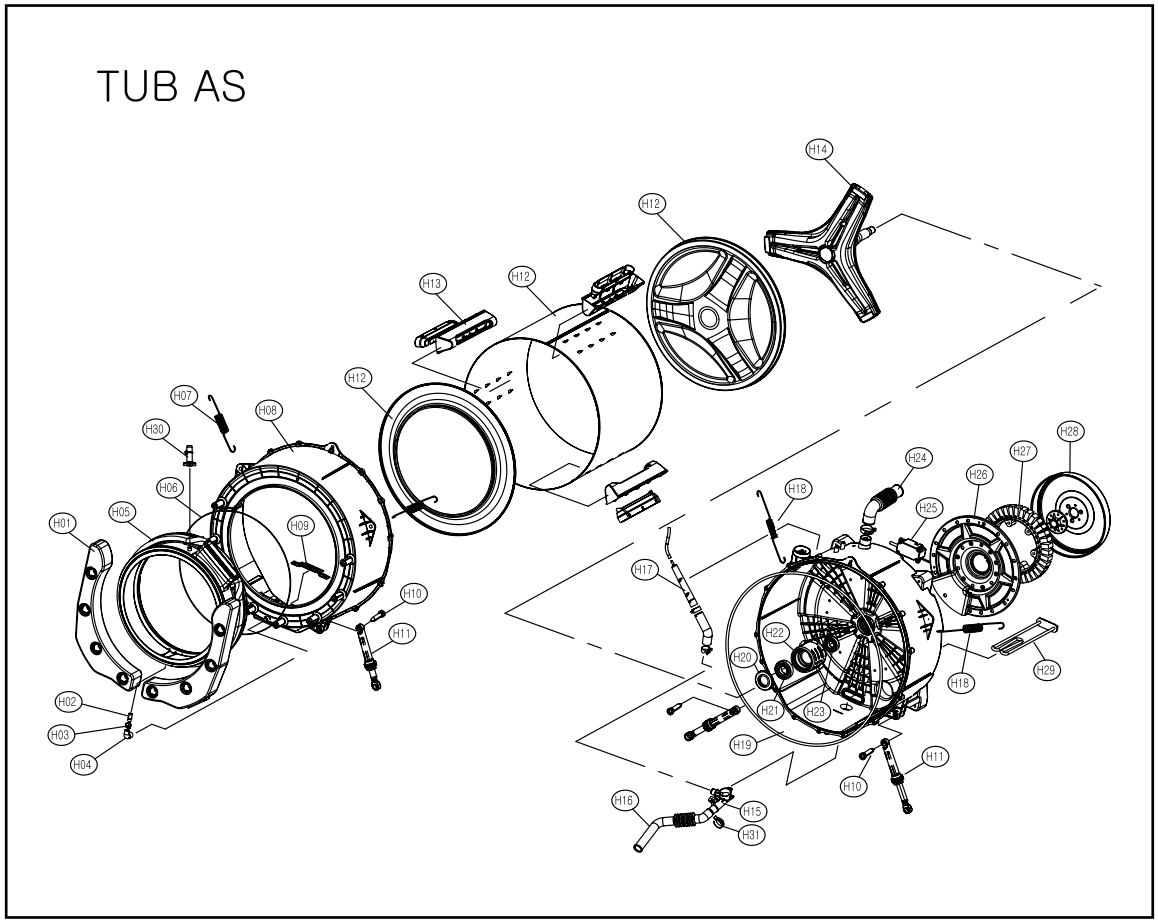
TUB AS
H14
H12
H13
H12
H12
H07
H08
H30
H06
H05
H01
H09
H10
H11
H02
H03
H04
H24
H27
H28
H26
H18
H25
H17
H22
H20
H21
H23
H19
H18
H29
H11
H10
H16
H15
H31

■ Base u as

No.	PARTS NAME	PARTS CODE	DESCRIPTION	Q'TY	REMARK
H01	BALANCER WEIGHT AS	3616106200	6.5kg	1	
H02	PIPE JOINT	3614404900	PP	1	
H03	CLAMP(HODE PIPE)	3611204300	ø14, MFZN	1	
H04	HOSE JOINT	3613266500	EPDM	1	
H05	GASKET	3612320700	EPDM, DRY	1	
		3612321200	EPDM, WASH	1	
H06	CLAMP GASKET AS	3611203600	GASKET	1	
H07	SPRING SUSPENSION F	3615113500	YELLOW	2	
H08	TUB FRONT	3618820401	PP+GF, FH7300GM	1	
H09	FIXTURE HEATER	3612006700	SUS	1	
H10	DAMPER PIN	361A700200	AKS, D=14.5	3	
H11	DAMPER FRICTION	361A700100	70N AKS ST=170-260	3	
H12	DRUM AS	3617003300	11kg	1	
H13	UFT AS	361A400300	11kg	1	
H13	LIFT	361A400600	PP	1	
H14	SPIDER AS	361A300200	11kg	1	
H15	DRAIN HOUSING I	36196TAM00	PP, PUMP	1	
H16	HOSE DRAIN	3613269000	EPDM, PUMP	1	
H17	AIR TRAP AS	3610AAR101	110RP, HOSE+TRAP	1	
H18	SPRING SUSPENSION R	3615113600	BLACK	2	
H19	GASKET TUBE	3612321100	EPDM FORM	1	
H20	WATER SEAL	361A600100	NBR	1	
H21	BEARING INNER	3616303100	6206Z, FAG	1	
H22	BEARING HOUSING	3616303000	ALDC	1	
H23	BEARING OUTER	3616303200	6205Z, FAG	1	
H24	HOSE AIR	3613266300	EPDM	1	
H25	UNIT BUBBLE PUMP	36189L4110	220-240V, 50/60Hz	1	
		36189L4G00	100-130V, 50/60Hz	1	
H26	BASE	3610392000	SECEN	1	
H27	UNIT STATER BLDC	36189L4800	ø256x28H, 36 SLOT, 2SENSOR	1	
H28	UNIT ROTOR BLDC	36189L4900	MAGNET24, SERRATION:3114D02000	1	
H29	HEATER WASH	3612800800	230V 2KW, 24.20HM, 8.6W/SQ	1	
		3612801200	2220V 2KW, 26.450HM, 8.6W/SQ	1	
		3612801500	240V 2KW, 28.80HM, 8.6W/SQ	1	
		3612801100	110V 1KW, 4.3W/SQ SUS	1	
		3612801900	120V, 1KW, 14.4MH, 4.3W/SQ SUS	1	
H30	NOZZLE SHOWER	3618104000	PP	1	
H31	CLAMP HOSE	3611203410	SK5, D+33	1	

5. SEQUENCE CHART OF PCB

1. SEQUENCE CHART

		Process Time	Cotton		Synthetic	Heavy Stain	Whites		ECO-White	
			Small	Middle	Small	Middle	Small	Middle	Small	Middle
Pre. Wash	Sensing	20sec								
	Water Supply	2min				■				
	Pre. Wash	10min				▮				
		8min								
	Drain	1min				■				
	Balancing Spin	1min				■				
	Mid.Spin	3min				■				
Washing	Sensing	20sec	■	■			■	■	■	■
	Water Supply	2min	■	■	■	■	■	■	■	■
	Washing1 (Heating)	90min						▮		
		80min					▮			
		35min							▮	▮
		30min		▮		▮				
		25min	■		■					
	Washing 2	25min				▮				
		20min	▮	▮	▮		▮	▮	▮	▮
		15min								
Rinse	Drain	1min	■	■	■	■	■	■	■	■
	Balancing Spin	1min	■	■	■	■	■	■	■	■
	Mid.Spin	3min	■	■	■	■	■	■	■	■
	Water Supply	2min	■	■	■	■	■	■	■	■
	Rinse 1	3min	■	■	■	■	■	■	■	■
	Drain	1min	■	■	■	■	■	■	■	■
	Balancing Spin	1min	■	■	■	■	■	■	■	■
	Mid.Spin	3min	■	■	■	■	■	■	■	■
	Water Supply	2min	■	■	■	■	■	■	■	■
	Rinse 2	3min	■	■	■	■	■	■	■	■
	Drain	1min	■	■	■	■	■	■	■	■
	Balancing Spin	1min	■	■	■	■	■	■	■	■
	Mid.Spin	3min	■	■	■	■	■	■	■	■
	Water Supply	2min	■	■	■	■	■	■	■	■
	Rinse 3	3min	■	■	■	■	■	■	■	■
Spin	Drain	1min	■	■	■	■	■	■	■	■
	Balancing Spin	1min	■	■	■	■	■	■	■	■
	Main Spin	7min								
		5min	▮	▮	▮	▮	▮	▮	▮	▮
		3min								
End	Crease care	60sec	■	■	■	■	■	■	■	■
	END	10sec	■	■	■	■	■	■	■	■
Remain Time Display			1:27	1:32	1:27	1:55	2:22	2:32	1:37	1:52
NOTE		1.Heavy Stain Course: Pre.Wash is Basic Default.								

		Process Time	Wool	Delicate	Blanket	Rapid	Drum cleaning	Memory
			Small	Small	Middle	Middle	High	
Washing	Sensing	20see						
	Water Supply	2min	■	■	■	■	■	
	"Wash 1 (Heating)"	60min						
		50min						
		35min						
		30min						
		15min				■		
	Wash 2	40min			▮		▮	
		20min			▮		▮	
		15min	■	■	▮	■	▮	
Rinse	Drain	1min	■	■	■	■	■	
	Balancing Spin	1min	■	■	■	■	■	
	Mid.Spin	3min	■	■	■	■	■	
	Water Supply	2min	■	■	■	■	■	
	Rinse 1	3min	■	■	■	■	■	
	Drain	1min	■	■	■	■	■	
	Balancing Spin	1min	■	■	■	■	■	
	Mid.Spin	3min	■	■	■	■	■	
	Water Supply	2min	■	■	■	■	■	
	Rinse 2	3min	■	■	■	■	■	
	Drain	1min			■			
	Balancing Spin	1min			■			
	Mid.Spin	3min			■			
	Water Supply	2min			■			
	Rinse 3	3min			■			
Spin	Drain	1min	■	■	■	■	■	
	Balancing Spin	1min	■	■	■	■	■	
	Mid.Spin	7min						
		5min			▮	▮	▮	
		3min	■	■	▮	▮	▮	
DRY	Crease care	60sec				■	■	
	Dry	15min					▮	
		10min				■	▮	
	Cooling	5min				■	■	
	END	10sec				■	■	
	Crease care	30min				■	■	
End	Crease care	60sec	■	■	■			
	END	10sec	■	■	■			
Remain Time Display			46	46	1:07	1:10	1:48	

NOTE

1. In Rapid and Drum cleaning program, dry is default function.
2. This chart will be changed depend on market condition.

2. Main function of PCB program

2-1. LOAD SENSING

1) Deciding the water level

① Cotton, Whites, ECO-White course will be followed by this process.
② Check the water level with dry laundry at the starting wash.
③ Check the water level by using motor output data during 20 sec, 65 rpm.

2) Deciding Spin Starting Step.

① Check after finishing washing step with wet laundry.
② Checking by using motor output data during 20 sec, 65 rpm.
③ The decided data is different depending on loading condition.

2-2. BALANCE SPIN

1) Motor running during balance spin.

① Spreading the laundry : Rotating the same 45 rpm with left and right direction alternatively.
② Attaching stop : Attaching the laundry to drum inside with constant speed.
③ Unbalance checking point : First step, check the U.B at 95 rpm, 160 rpm.
Second step, check the U.B at 95 rpm, 350 rpm.
Third step, at 300 rpm. if the unbalance data is over the criterion,
This process will be repeated.
④ Drain step : Drain at water around 160 rpm.
⑤ After drain, check the unbalance data again. This is so-called balance spin step.

2) Property of balance spin.

① Conducting 10 times maximum.
② If the washer can not pass balance spin step during 10 times, then water will be supplied.
③ If the washer can not pass 20 times of balance spin, UE error mode will be displayed on PCB.

2-3. DOOR S/W

1) The working principle of Door S/W

① Door Locking
Bimetal on (3 sec) --> solenoid (supply 20msec pulse 2 times)

② Door Unlocking
Bimetal off --> solenoid (supply 20msec pulse, until unlock)

③ After door locking, all parts can work normally.

④ After pressing power button, if the temperature of wash thermistor is over 50°C or the water level is over the safety level, the door will be locked.

⑥ The door will be unlocked immediately after all processes are finished.

⑦ The door can be opened during processing if there is no problem to unlock.

2) DOOR OPEN SYSTEM

① If add the laundry during washing, press the door unlock button.

② Door open sequence at abnormal condition.

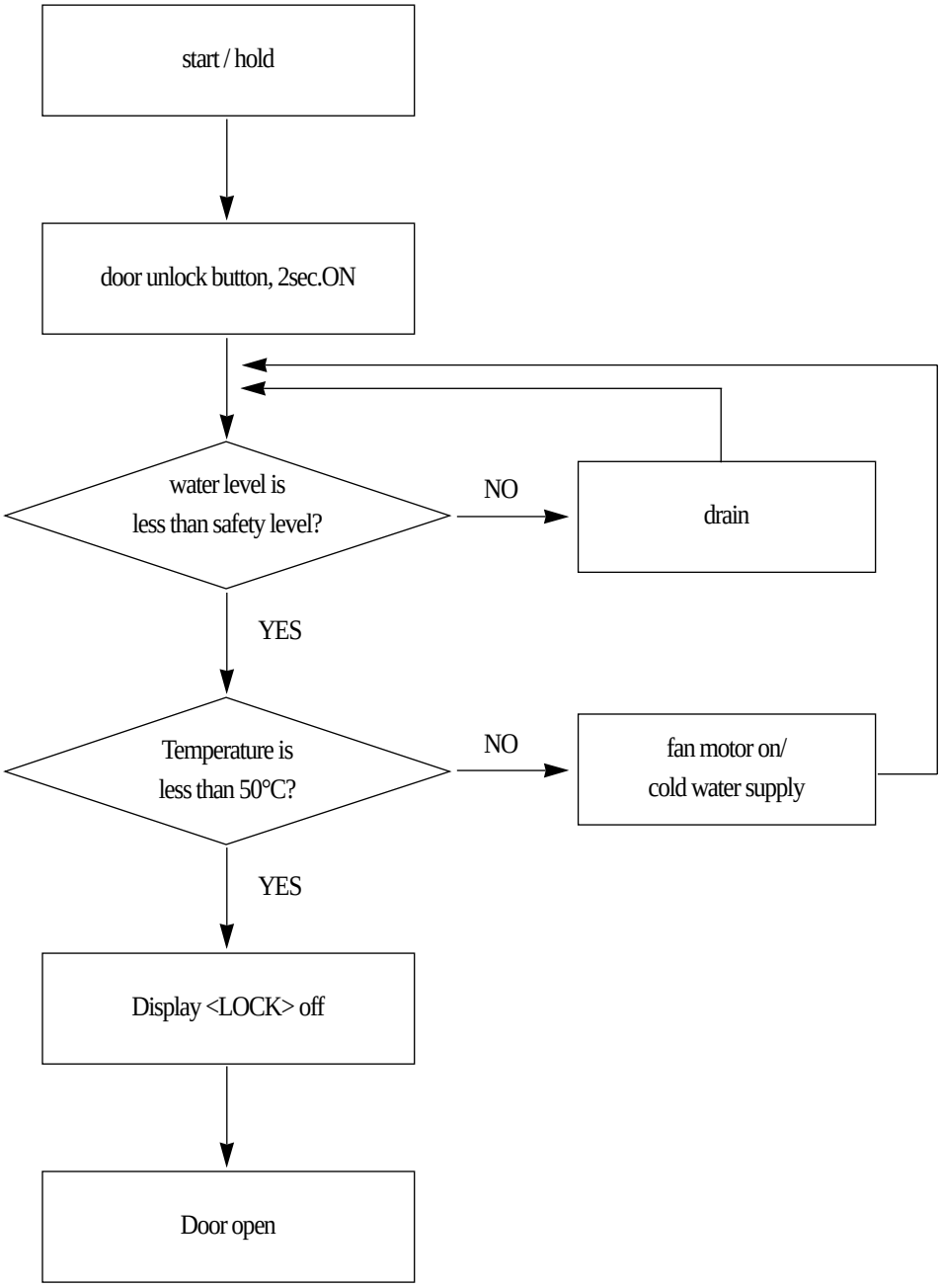

2-4. Child Lock

① Press the “TEMP”. and “DRY” button simultaneously during processing.
② Under the Child Lock function, only power button is working.
③ During Child Lock function, CHL will be displayed on PCB.
④ In order to unlock Child Lock mode, press "TEMP" and "DRY" simultaneously.

2-5. The sequence of drain

① If the checking time to reset point is below 1 min, the remaining drain time is 30 sec.
② If the checking time to reset point is over 1 min, the remaining drain time is 2 min.
③ If the checking time to reset point is over 10 min, OE singal will be appeared on PCB.
④ If the temperature is over 50°C, the water will be supplied to high water level, then the drain will start.

3. Convenience service functions(test mode)

1. Testing Mode

PCB and other electronic parts will be tested without water supply whether they are normal or not.

1) Process : press power button --> press "SPIN" button 3 times with pressing "WASH" button --> 'L d' will be shown on LED --> Whenever pressing "TEMP" button 1 time, below process will be occurred.

L C (Lock Closed) --> F (Fan Motor) ---> H (Hot V/V) --> C (Cold V/V) ->
P (prewashing V/V) -> d (dry V/V) -> bb (bubble) -> dr (drain motor) ->
L O(Lock S/W Open)

2) More details

① When turn on 'LOCK' signal, all process is conducting normaly.
② When working starts, the PCB displays all the sensor conditions.
③ In this case, BLDC Motor is not tested. In order to test it, select spin or rinse.

2. Continous testing mode

1) Process : after pressing "WASH", "RINSE", "SPIN" button simultaniously, press "POWER" button.

ALL LED On/Off 1 time --> L C (Lock Closed) ---> R (Motor right) --> L (Motor Left) --> F (Fan Motor) ---> H (Hot V/V) --> C (Cold V/V) --> b (pre-wash V/V)
--> d (dry V/V) --> bb (bubble) --> h1 (HEATER WASH)--> h2(HEATER DRY) --> dr (DRAIN MOTOR On) -->L O(Lock S/W Open)

2) More tails

① LED test can be done with all LED On.
② All sensor conditions will be shown on PCB during processing.

4. ERROR DISPLAY

MESSAGE	ERROR	CAUSE	SOLUTION
IE	WATER INLET ERROR	The water tap is closed.	Open the water tap.
		The filter of the valve inlet is clogged.	Clean the filter of the valve inlet.
		The valve inlet is an inferior product or broke down.	Change the valve inlet.
		The water level sensor (sensor pressure) is an inferior product or broke down.	Change the water level sensor (sensor pressure).
		The drain motor works during water supply.	Change the drain motor.
		The PCB ASS'Y does not check the water level.	Change the PCB ASS'Y.
OE	DRAIN ERROR	The drain hose is kinked or clogged.	Clean and straighten the drain hose.
		The drain motor is an inferior product.	Change the drain motor.
		The valve inlet works during drain.	Change the valve inlet
		The water level sensor is an inferior product .	Change the water level sensor.
		The PCB ASS'Y does not check the water level.	Change the PCB ASS'Y.
UE	UN-BALANCE ERROR	The laundry is concentrated to one side of the drum during spin.	Rearrange the laundry.
LE	DOOR OPEN ERROR	The Start/Hold button is pressed while the door is opened.	Close the door.
		The switch door lock is an inferior product.	Change the switch door lock.
		The PCB ASS'Y does not check the door lock.	Change the PCB ASS'Y.
E2	OVERFLOW ERROR	The water is supplied continuously due to an inferior valve inlet.	Change the valve inlet.
		The valve inlet is normal, but the water level sensor (sensor pressure) is inferior.	Change the water level sensor (sensor pressure).
		The drain motor dose not work. (The drain motor is an inferior product or broke down.)	Change the drain motor.
E3	FAN MOTOR ERROR	The fan motor does not work. (The fan motor is an inferior product or broke down.)	Change the fan motor.
		The PCB ASS'Y does not control the fan motor.	Check the connector or change the PCB ASS'Y .
E4	LEAKAGE ERROR	Water leaks from the tub or the hose drain.	Check the leak of the tub or the hose drain. Then change the tub or the hose drain.
		The foreign matter is jammed in the drain bellows. (Non-pump model)	Remove the foreign matter in the drain bellows.
E5	HIGH VOLTAGE ERROR	The laundry is jammed between the gasket and the drum.	Rearrange the laundry.
		The PCB ASS'Y is an inferior product.	Change the PCB ASS'Y.
E6	EMG ERROR	The laundry is jammed between the gasket and the drum.	Rearrange the laundry.
		The motor is an inferior product.	Change the motor.
		The PCB ASS'Y is an inferior product.	Change the PCB ASS'Y.
E7	DIRECTION ERROR	The motor spins into an opposite direction.	Change the PCB ASS'Y or the motor.
		The motor hall IC is an inferior product or broke down.	Change the motor hall IC or the motor.
E8	MOTOR ERROR	The motor is not normally connected.	Check the connector of the motor.
		The motor does not work. (The motor is an inferior product or broke down.)	Change the motor.
E9	SENSOR PRESSURE ERROR	The water level sensor is an inferior product.	Change the water level sensor.

MESSAGE	ERROR	CAUSE	SOLUTION
H1	THERMISTOR (TEMP. SENSOR) DRY ERROR	The thermistor dry is an inferior product or broke down.	Change the thermistor dry.
		The thermistor dry is not connected normally.	Check the connector of the thermistor dry.
H2	THERMISTOR WASH ERROR	The thermistor wash is an inferior product or broke down.	Change the thermistor wash.
		The thermistor wash is not connected normally.	Check the connector of the thermistor wash.
H3	THERMISTOR DRY OVERHEATING ERROR	The fan motor does not spin with the proper rpm. (The fan motor is an inferior product or broke down.)	Change the fan motor.
		The thermistor dry is an inferior product or broke down.	Change the thermistor dry.
H4	THERMISTOR WASH OVERHEATING ERROR	The heater worked without the water in the tub.	Check the water level.
		The thermistor wash is an inferior product or broke down.	Change the thermistor wash.
H5	WATER TEMP. ERROR	The water temp. is over 45°C in delicate & wool course.	Change the thermistor wash.
H6	HEATER WASH ERROR	The heater wash dose not work. (The water temp. doesn't rise over 2°C during 15min.)	Change the heater wash.
H7	HEATER DRY ERROR	The heater dry dose not work. (The water temp. doesn't rise over 3°C during 8min.)	Change the heater dry.
H8	HEATER WASH OVERHEATING ERROR	The heater worked without the water in the tub.	Check the water level and the heater wash.
PFE	PUMP FILTER ERROR	The drain pump filter is clogged.	Clean the drain pump filter.
		The drain pump does not work during spin.	Change the drain pump.
		The large amount of detergent was used.	Use the proper amount of detergent.
		The drain hose is placed higher than 1m above the floor.	Place the drain hose 1m below the floor

6. TROUBLE SHOOTING

1) VALVE INLET

TROUBLE	SITUATION	CAUSE	CHECK POINT	SOLUTION	PCB ERROR MODE
WATER IS SUPPLIED	NO WATER SUPPLY WITH "BUZZ" SOUND	closed water tap	check the water tap opened	Open the water tap	"IE"
		coil short	check the resistance 4320~5280Ω		"IE"
		alien materal jammed	check the filter	Clean the filter	"IE"
		alien material inside inlet valve	–	Change the Inlet-Valve	"IE"
	NO WATER SUPPLY WITH SILENCE	unfixing connector	check the connector	The contact of the Connector	"IE"
		coil short	check the resistance 4320~5280Ω check the connector	Change the Inlet-Valve	"IE"
		harness short	check the pressure switch		"IE"
WATER SUPPLY IS NOT STOPPED	THE WATER SUPPLY START WHEN POWER "ON"	pressure s/w broken	check the hose torn or twisted	Change the Sensor Pressure	"E2"
		pressure hose broken	–	Change the bad parts	"E2"
	THE WATER SUPPLY START WHEN POWER "OFF"	inlet valve broken	check the leakage of inlet valve	Change the Inlet-Valve	-
Etc	water leakage to the side	inlet valve poorly assembled		Change the Inlet-Valve	-

Checking method of coil resistance, harness, connector.

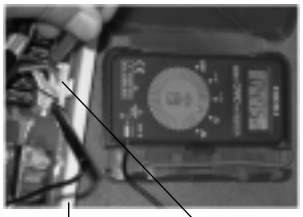

MAIN PCB

"8P" WHITE CONNECTOR

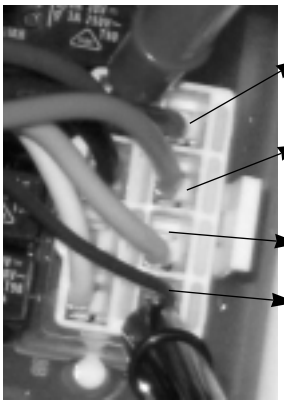

WASH VALVE(GREEN) : COMMON(BLUE)/RESISTANCE TEST

PRE-WASH VALVE(RED) : COMMON(BLUE)/RESISTANCE TEST

DRY VALVE(YELLOW) : COMMON(BLUE)/RESISTANCE TEST

COMMON(BLUE)

* "IE" ERROR : lack of water supply

2) PRESSURE SWITCH

TROUBLE	SITUATION	CAUSE	CHECK POINT	SOLUTION	PCB ERROR MODE
continuously water supply	inlet valve is normal, but continuous water supply	bellows problem	frequency Check : refer to below	change the pressure switch	"E2"
		hose problem	frequency Check : refer to below	change the hose	"E2"
			check the fine hole	change the hose	"E2"
		clogged hose	check the hose condition	remove the alien	"E2"
"E9" ERROR	water level frequence below 15kHz or over 30kHz	connector slipped out	check the connector condition	reconnecting	"E9"
		pressure switch broken	frequency Check : refer to below	change the pressure switch	"E9"
		connector short	connector broken		"E9"

Checking method of coil registance, harness, connector.

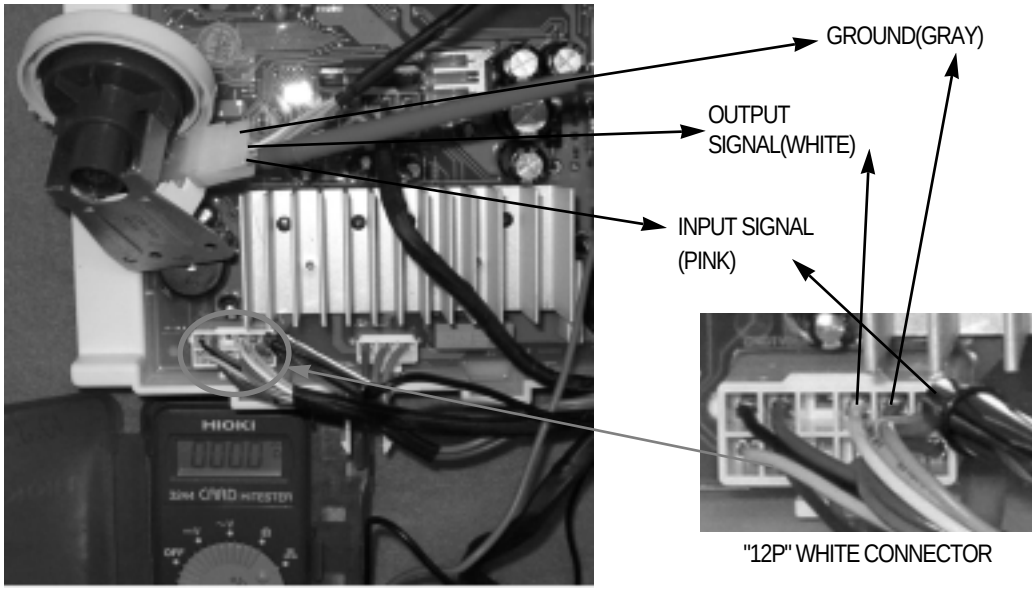

* E2 : overflow error ;Water level is higher than overflow level because of continuous water supply.
E9 : Pressure switch trouble, the frequency is less than 15kHz or more than 30kHz in the processing.

■ Checking method of the Frequency

① Power ON

② First, press the "DRY" button 3 times with pressing the "WASH" button. The frequency of Air status will be appeared.
ex) 623 → 26.23kHz.

③ Press "TEMP" button
1 time: water supply
2 times: stop the water supply
3 times: start the drain
4 times: stop the drain
5 times: return to Air status mode

3) DOOR LOCK SWITCH

1) CLASS

Failure Status	Details	Cause	Diagnosis of Failure	Solution	PCB ERROR MODE
"Tick" Sound	Tick Sound happens	Normal Sound	When Door is locked/unlocked, this Solenoid Working sound is heard.		-
"LE" Error	"LE" with tick sound	Connector slipped out	check the joining status of connector by eye	Assemble Connector	"LE"
		DOOR closed loosely	-	Close Door securely	"LE"
		Failure of DOOR HOOK	-	Replace DOOR AS	"LE"
		CATCH CAM broken	Tick sound happen	Replace DOOR S/W	"LE"
	"LE" without tick sound	Connector slipped out	check the joining status of connector by eye	Assemble Connector	"LE"
		Terminal slipped out	Refer to below checking method.	Insert Receptacle no.2 or no.3	"LE"
		Solenoid Coil Disconnection	Refer to below checking method.	Replace DOOR S/W	"LE"
DOOR not open	Power Failure/Forced Power Off during operation	During operation, "Power Failure" or "Forced Power S/W OFF" causes door not to be opened until maximum 5 minutes pass.			
	Power on state	Water remained in tub	Check whether the water level is over safety level.	After draining water, open the door	-
		hot temp. in tub	Prevent the burn due to hot temp. after dry.		
	ETC	Follow below process			

Checking Method of wiring/coil disconnection, connector slipping out on PCB board : Operate with the Door lock switch connected

1. Replacing method of DOOR LOCK SWITCH
   1) Open DOOR, disassemble CLAMP SPRING for fixing gasket
   2) Disassemble GASKET

   3) Disassemble two screws for DOOR LOCK S/W

   4) Disassemble DOOR LOCK S/W
   5) Assemble in the reverse order

2. Checking method of DOOR LOCK SWITCH

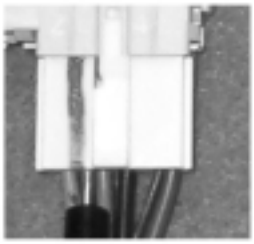

PIN 2 3 4 5
array (No no.1)

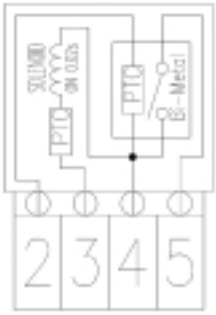

Between No. 3 & No.4
: if 156 ~ 234Ω, it is normal

3. Checking method of DOOR LOCK SWITCH

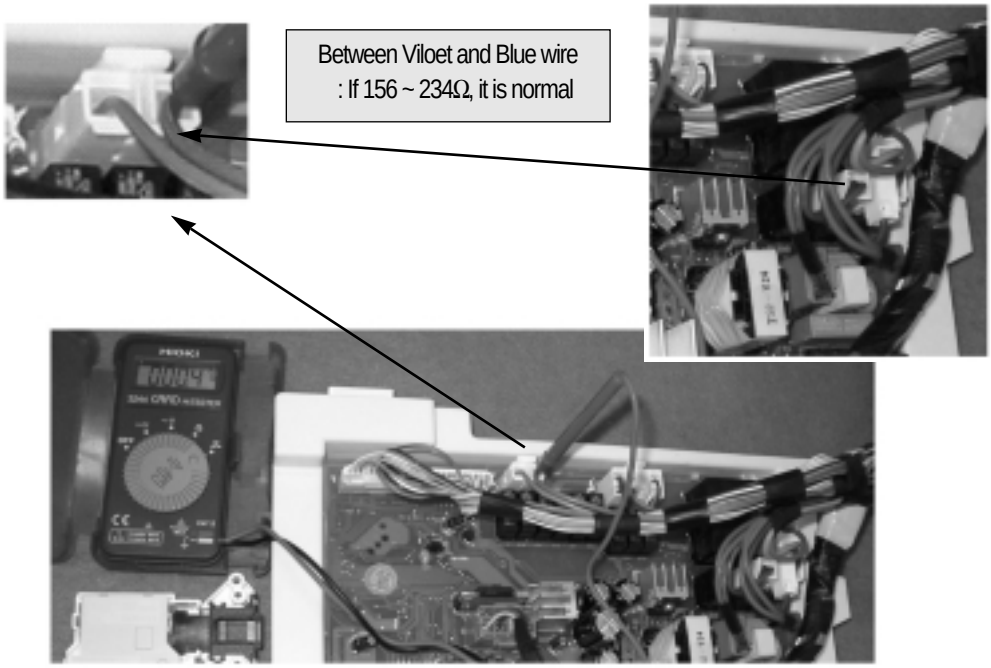

4) HEATER

Failure Status	Cause	Diagnosis of Failure	Solution	PCB Error Mode
Can not heat water	Wiring Disconnection	Check whether disconnected or not : See Fig. A	Connecting the disconnecting point	"H6"
	Heater Wash Disconnection	Check whether disconnected or not : if normal, the resistance between two ends is 23.3~25.7Ω.	Replacing Heater Wash	"H6"
	Connector/Terminal Seclusion	Check whether disconnected or not : See Fig. A	terminal/connector tightly Connecting	"H6"
	Heater Wash/Thermistor Wash Poor	Measure the resistance of two ends of the sensor : if 11.981KΩ at R25, it is mormal	Replacing temp. sensor	"H2"
Overheat water	Heater Wash/Thermistor Wash Poor	Measure the resistance of two ends of the sensor : if 11.981KΩ at R25, it is mormal	Replacing Heater Wash	"H2" or "H4"
Can not dry	Wiring Disconnection	Check whether disconnected or not : See Fig. B	Inserting terminal/connector	"H7"
	Heater Dry Disconnection Fuse Temp.	Check whether disconnected or not : if normal, the resistance between two ends is 22.3~24.7Ω.	Replacing Fuse Temp.	"H7"
	Connector/Terminal	Shipped out	tightly Connecting	"H7"
	Slipped out Operation Trouble of FAN	Check whether disconnected or not : See Fig. B	Re-connecting	"H7"
	MOTOR	Excessive Noise : Restraint/Failure of Fan Motor	Replacing Fan motor	"H7" or "E3"
	Heater Wash/Thermistor	Fan slipped out : MOTOR is operating, but there is rotating sound.	Re-assemble after disassembling	"H7"
	Fault of Thermistor (Dry)	Measure the resistance of two ends of the sensor : if 26.065KΩ, it is mormal	Replace Thermistor	"H1"

Checking Method of wiring/coil disconnection, connector slipping out on PCB board : Operate with the heater connected

[Figure A]

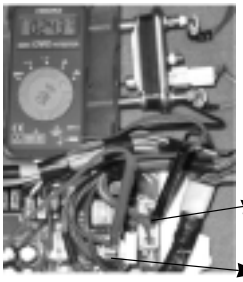

* Inspect Wiring/Heater Wash Disconnection : Check the current and resistance of two terminals

3P Connector orange wire

1P Connector Blue Wire

[Figure B]

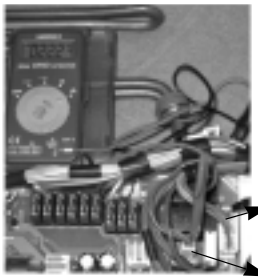

* Inspect Wiring/Heater Dry Disconnection : Check the current and resistance of two terminals

3P Connector Red Wire

1P Connecor Blue Wire

* Replaceing method of Heater and Temp. Sensor

1. Disassemble Connector

2. Disassemble EARTH and NUT for fixing heater

3. Replace heater & sensor

4. Assemble in the reverse order. Be sure to assemble in the order : Nut for heater-Nut for EARTH.

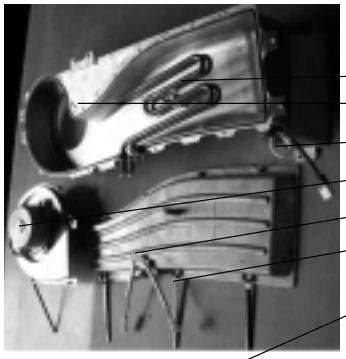

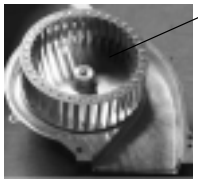

* Structure of DUCT B As
1. Heater Dry
2. Diecasting DUCT
3. Thermistor Dry
4. FAN MOTOR
5. Fuse Temp.
6. Switch Bimetal
7. FAN

*** ERROR MODE**

1. "H1" : Thermistor Dry OPEN/SHORT
2. "H2" : Thermister Wash OPEN/SHORT
3. "H3" : Dry Overheating(Sensing Temp. is over 125℃)
4. "H4" : Wash Overheating(Sensing Temp. is over 95℃)
5. "H5" : Wash Overheating
   (In Wool, Lingerie courses sensing temp. is over 45℃)
6. "H6" : Abnormal condition of Heater Wash
   (when the temp. increase at 10 minutes after heater operation is under 10 ℃)
7. "H7" : Abnormal condition of Heater Dry(when the temp. increase at 10 minutes after heater operation is under 10℃)
8. "H8" : Heater Wash Overheating
   (when the temp. increase within 30sec after heater operation is over 5℃ without water)
9. "E3" : FAN MOTOR Broken(no signal from HALL IC)

5) MOTOR

1) BLDC MOTOR

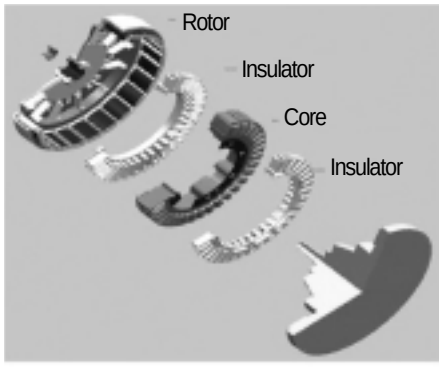

BLDC MOTOR

2) Driving mechanism of BLDC MOTOR

Magnetic density flow of BLDC Motor

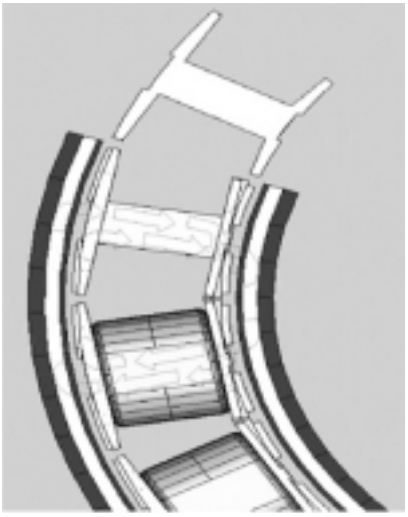

Sequence diagram of BLDC MOTOR

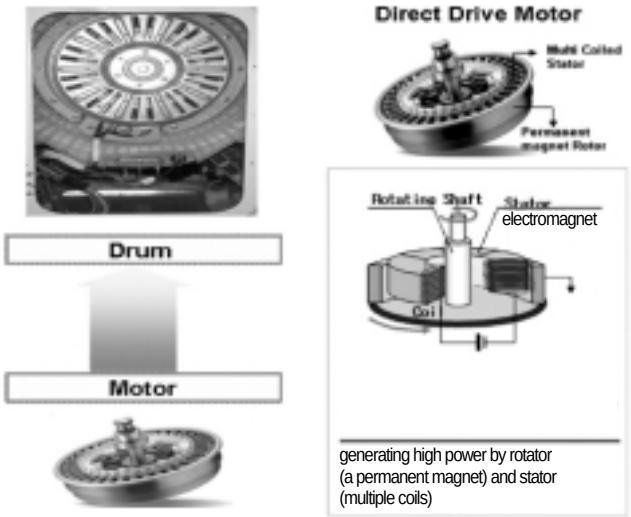

6) DRY SYSTEM(OPTION)

1) DRY SYSTEM

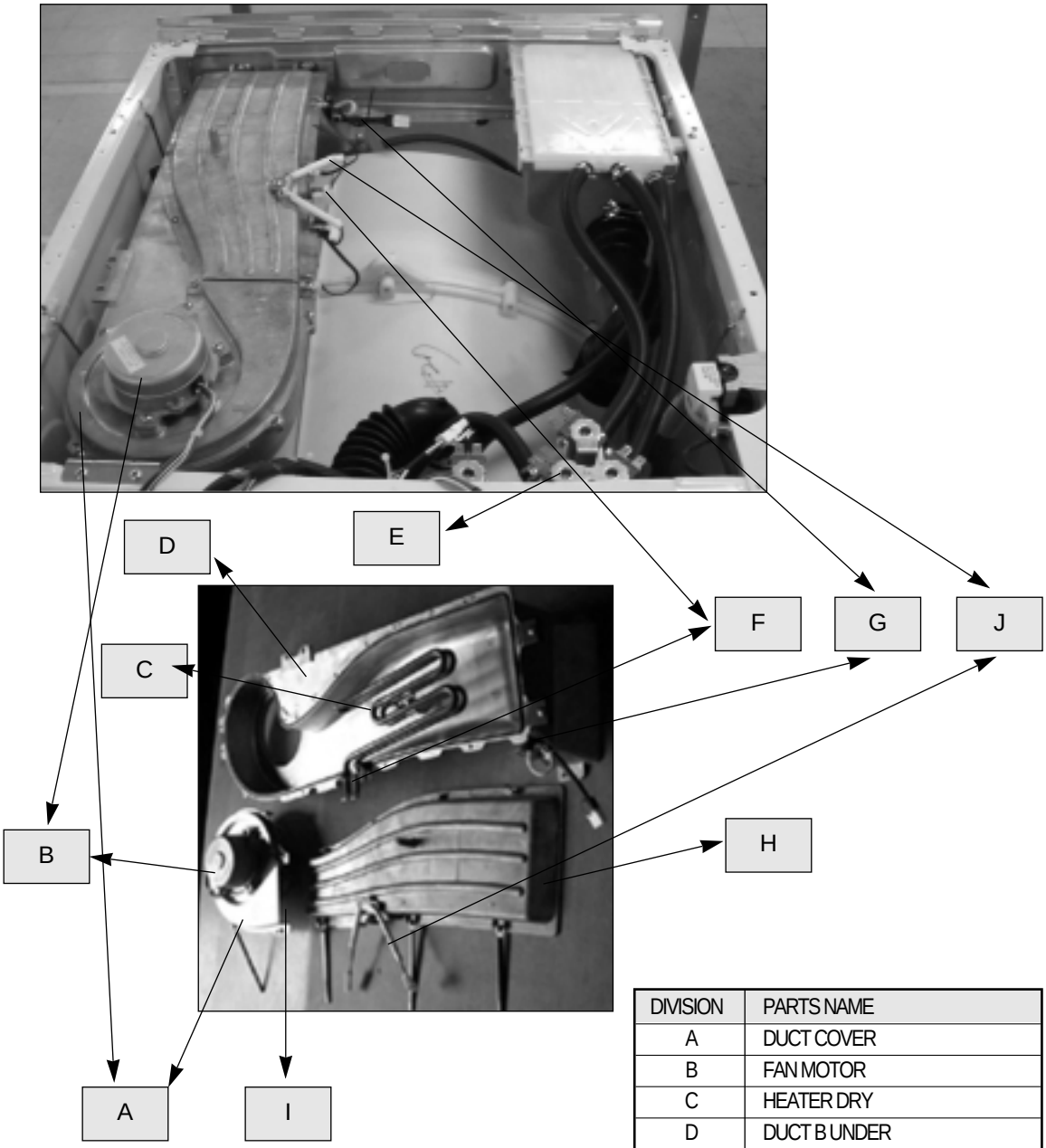

DIVISION	PARTS NAME
A	DUCT COVER
B	FAN MOTOR
C	HEATER DRY
D	DUCT B UNDER
E	VALVE INLET(DRY)
F	THERMOSTAT(Bie-METAL)
G	THERMISTOR
H	DUCT B UPPER
I	FAN AS
J	FUSE TEMPERATURE

2) DRY FUNCTION DIAGRAM

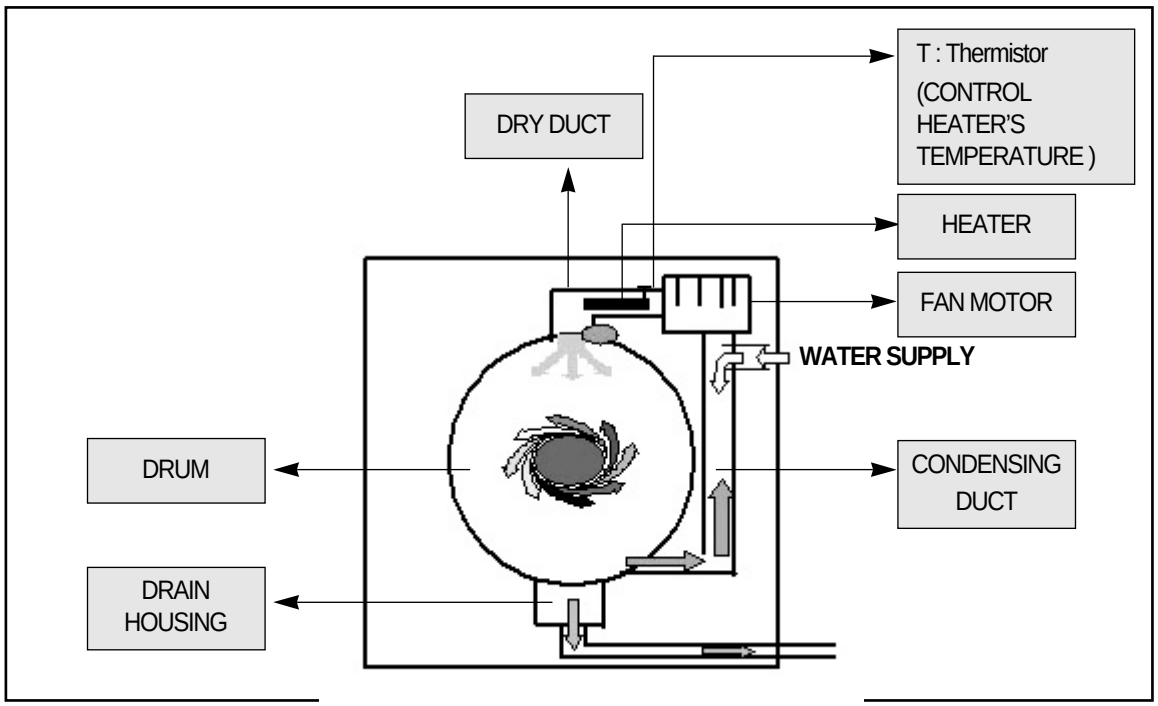

While rotating DRUM, DRY HEATER applice heat to air and FAN blows it into DRUM evaporating water in the laundry.

- Evaporated water is sucked into CONDENSING DUCT, and condensed in DUCT contacting WATER SUPPLY (condensed water is extracted through DRAIN HOUSING).
- Dry function is performed by continuous repetition of evaporating and condensing circulation as above.

3) TEMP-TIME GRAPH DURING DRY CYCLE

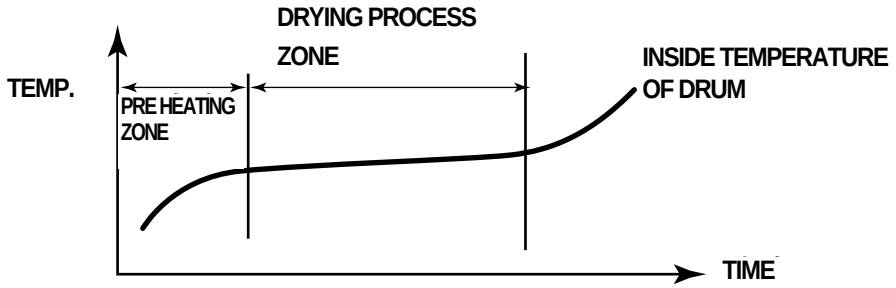

4) DRY COURSE

COURSE	DRY COURSE
LOW TEMP.	Heater control temperature is 60°C On/70°C Off
IRON	Heater control temperature is 60°C On/70°C Off, with good condition for ironing
STANDARD	Heater control temperature is 87°C On/95°C Off, drying time is 166 min
STRONG	Heater control temperature is 87°C On/95°C Off, drying time is 216 min
SELECTING TIME 1Hr, 2Hr, 3Hr.	Heater control temperature is 87°C On/95°C Off, customer can select the drying time as

In order to check the drying temperature during process going on : --> press the "DRY" button, the display shows as below.

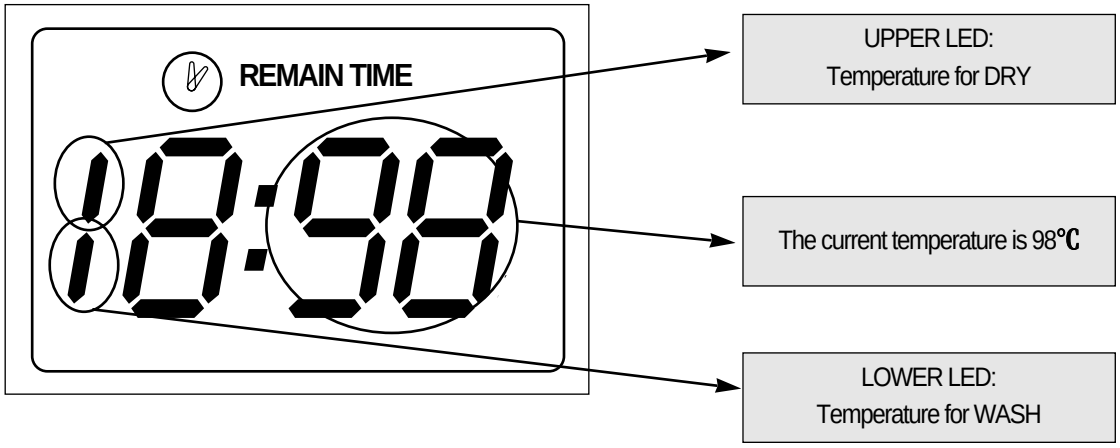

5) TROUBLE SHOOTING OF DRY SYSTEM

❖ HEATER DRY

Function : heating the air during dry

• FAILURE MODE : * "H7" - The air cannot be heated to 10°C during 2 min.

• CHECKING METHOD : * Check the resistance of heater coil and replace with new one.

❖ Thermistor

Function : sensing the air temperature.

• FAILURE MODE : * The air cannot be heated even though water is supplied.

* "H1" - shot or cut-off

* "H3" - air temp. is reached over 150°C

• CHECKING METHOD : * Check the resistance of thermistor, replace with new one.

❖ FUSE TEMPERATURE

function : protecting from the fire hazard or overheating, if the temp., rises over 128°C, power supply will be cut-off.

• Pictures

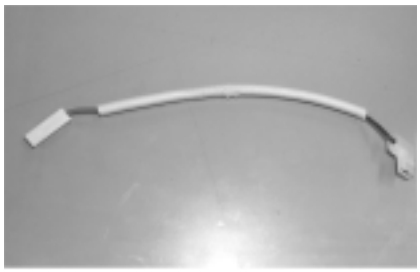

FIXED BY WASHER + SCREW

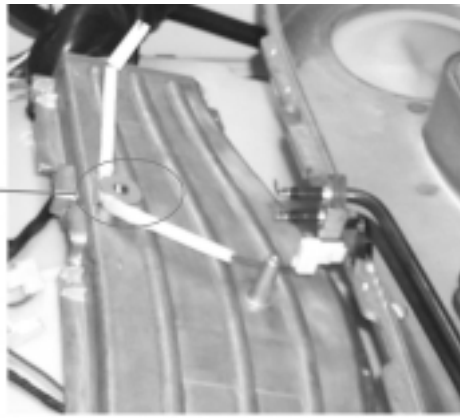

• FAILURE MODE : Dry is not performed.

• CHECKING METHOD : Check if fuse is short, and replace with new one.

❖ SWITCH THERMOSTAT(BIMETAL)

function : control the duct temperature, if the temp reached over 150°C, all power supply will be cut. and if the temp go down 120°C the power will be ON.
protecting overheating by cutting off heater power supply if the temperature rises over 150°C, and reoperating heater by connecting heater power supply if the temperature falls under 120°C.

• OPERATING TEMPERATURE

OPEN TEMPERATURE(OFF)	150℃±5℃
CLOSE TEMPERATURE(ON)	120℃±5℃

• PICTURE

❖ UNIT FAN MOTOR

function : circulating the inside air during dry process.

• SPEC

ITEMS		SPEC
RATING VOLTAGE		24V
RPM	MOTOR	3700 ± 10%
	DUCT FAN AS	1900 ± 10%
ROTAING DIRECTION		CW

• PICTURE

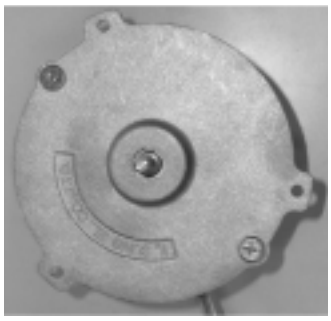

• FAILURE MODE : * E3 shown : FAN MOTOR cannot work.

• CHECKING METHOD : Check the FAN MOTOR is short, and replace with new one.

6) FAR-INFRARED COATING (OPTION)

function : steilization with radiating far- infra red, by means of ceramic coating.
increasing the dry efficiency and effecting sterilization by radiating far infra-red ray from ceramic particle coating on DUCT B UPPER

• principle

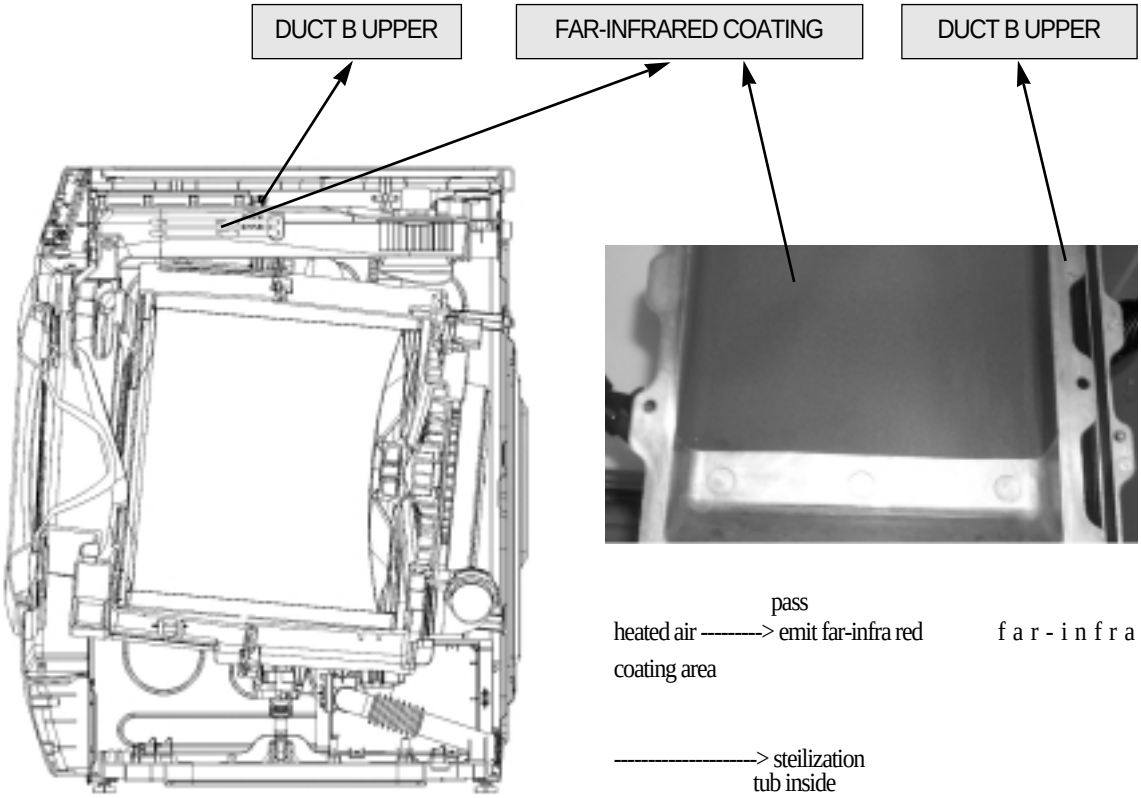

The far infrared ray is emitted from the ceramic coating, comes into drum by radiation and reflection, and penetrates deeply into laundry with the effective moisture removal and sterilization.

7) LACK OF DRY PERFORMANCE

• Situation : after drying, the clothes still get wet.

cause) ☞ The laurdry amount is more than the recommendation capacity 7.0kg.
☞ Condensing cold water is not supplied.
☞ Clogging Bellows Duct results in poor air circulation.

checking method)

part name	checking point	checking results	jurge	repair method
BELLOWS DUCT	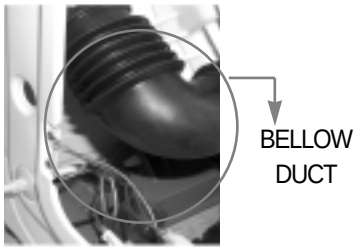	clogging bellows duct	heater was overheated owing to poor air circulation	clean the bellow duct
VALVE INLET +Condensing HOSE	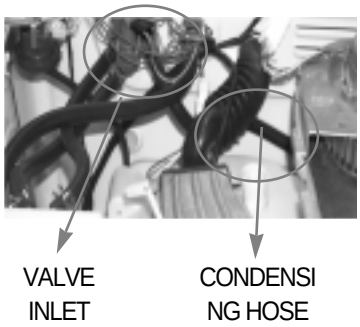	no water supply from inlet valve	VALVE INLET connector slipped out	connect normally
			VALVE INLET broken	replace valve inlet
			ill-connection of condensing hose to duct pipe	connect normally

• Situation after drying, the clothes was soaked and hot.

cause) ☞ The dry is done from bad spin performance because of unbalance.
☞ no spin was done before the dry had started.

• Situation : PCB shows "H1" or "H3".

cause) ☞ Thermistor is broken.
☞ Thermistor is short or cut-off.

countermeasures) ☞ replace the Thermistor.

• Situation : PCB shows "H7".

cause) ☞ Dry heater is cut-off.
☞ Fuse temp. is cut-off.

repaire method) ☞ replace the Dry heater.
☞ replace the Fuse temp.

checking point	part name	checking results	repaire method
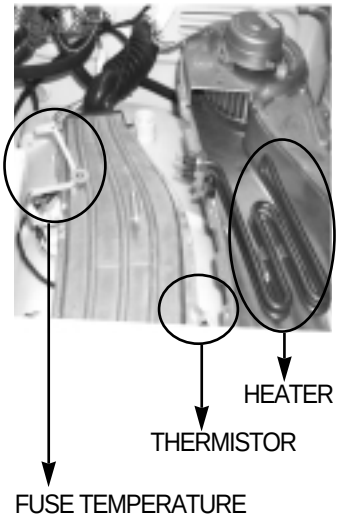	HEATER	dry Heater is short or cut-off.	replace the dry Heater.
	SENSOR TEMP.	Thermistor is short or cut-off.	replace the Thermistor.
	FUSE TEMP.	FUSE TEMPERATURE is cut-off.	replace the FUSE TEMPERATURE.

• situation : PCB shows "E3".

cause) ☞ FAN MOTOR can not work.
countermeasures) ☞ Replace the Fan Motor.

part name	checking results	repair method	disassemble process of Fan Motor
FAN MOTOR	fan motor failure	replace fan motor	① Disassemble the DUCT AS from DUCT B AS. (SCREW 4 EA) 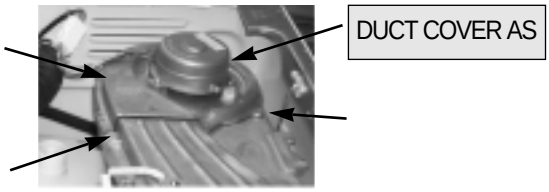 ② Disassemble FAN AS from DUCT COVER AS by using L-wrench. 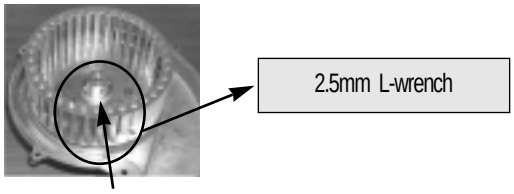 ③ Disassemble FAN MOTOR .(SCREW 3EA)

Remarks) control times of each parts during dry process

parts	Control time
MOTOR	10 sec On, 10sec Off
DRAIN MOTOR	Continous working
FAN MOTOR	Continous working
DRY HEATER	87°C On, 95°C Off
INLET VALVE	5sec On, 20sec Off

7. Wiring Diagram

DWD-E1211R: DOUBLE VALVE, BUBBLE

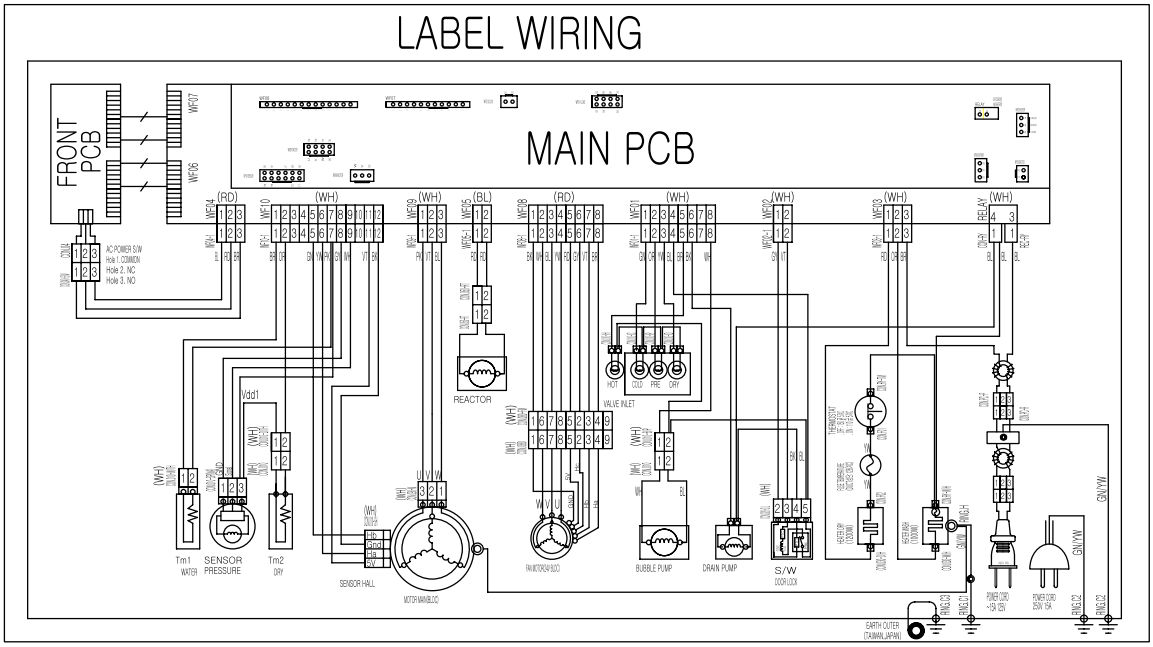

E1211R

DWD-E1211R: DOUBLE VALVE, N/BUBBLE

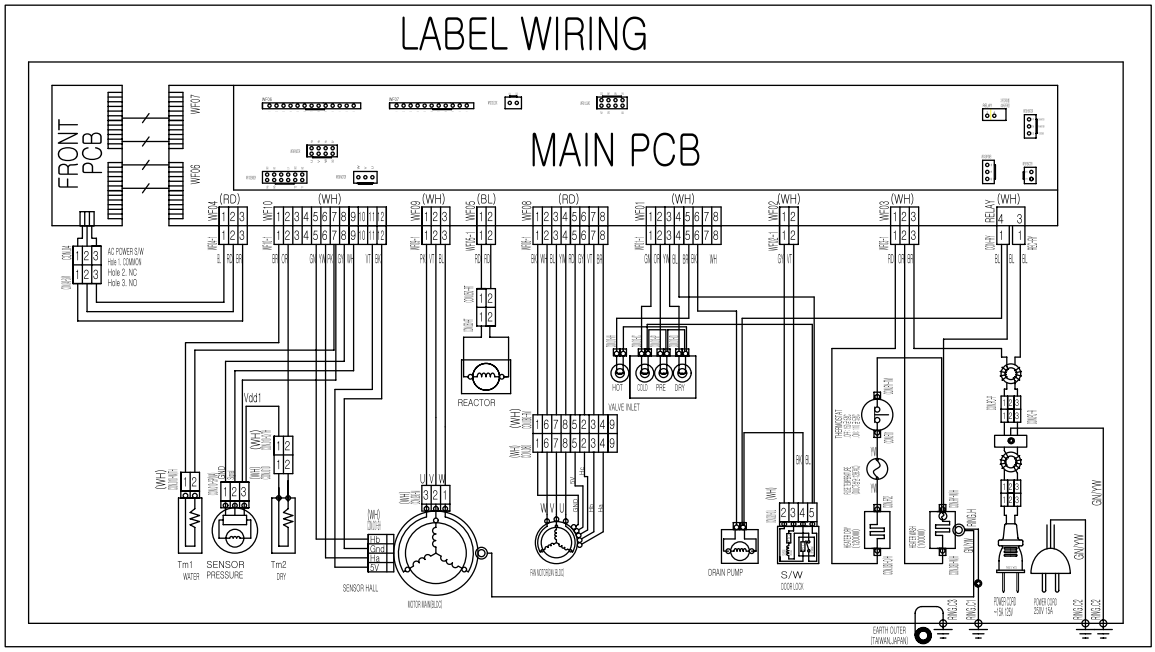

E1211R

DWD-E1221R: DOUBLE VALVE, BUBBLE

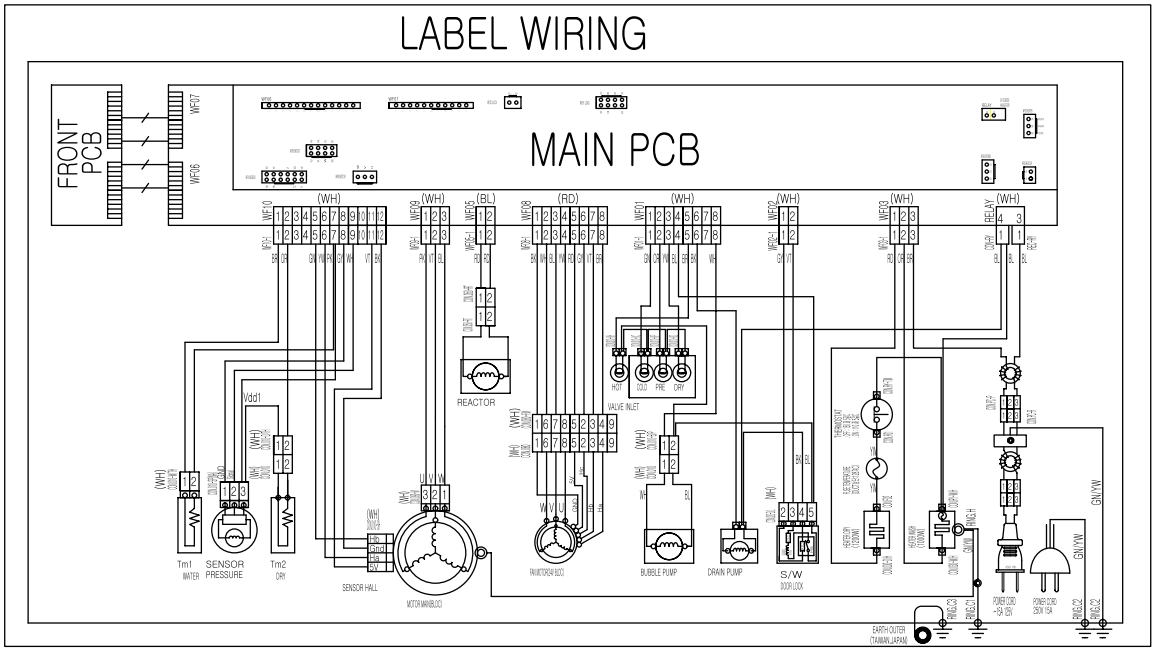

E1221R

DWD-E1221R: DOUBLE VALVE, N/BUBBLE

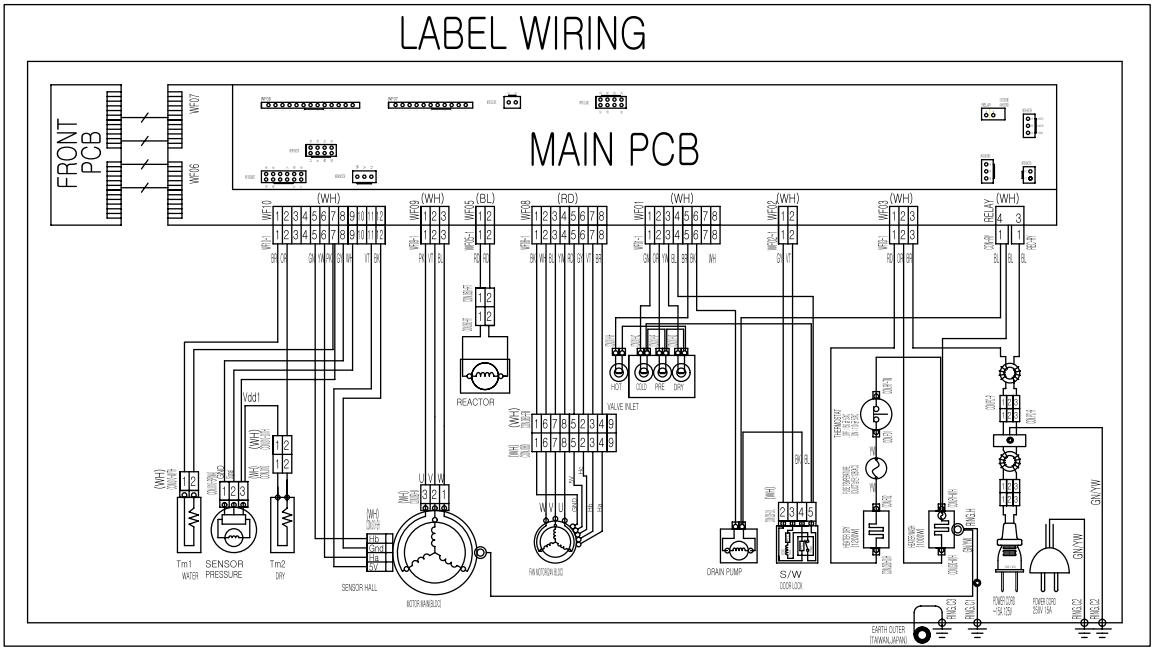

E1221R

DWD-E1211R: DOUBLE VALVE, BUBBLE

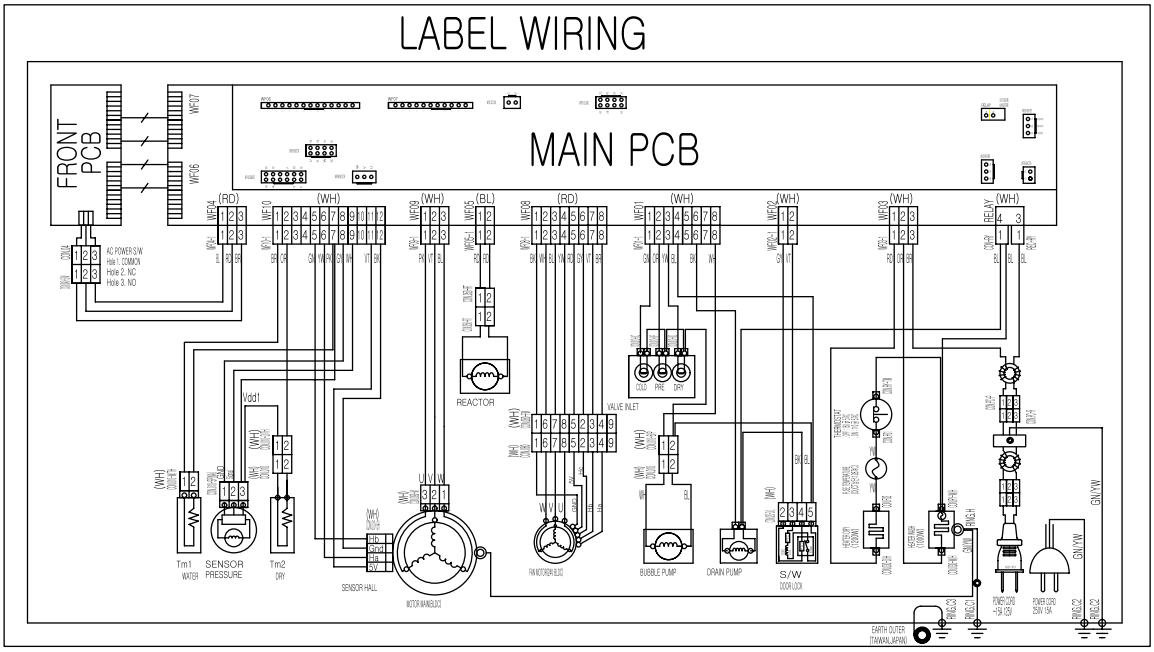

E1211R

DWD-E1211R: DOUBLE VALVE, N/BUBBLE

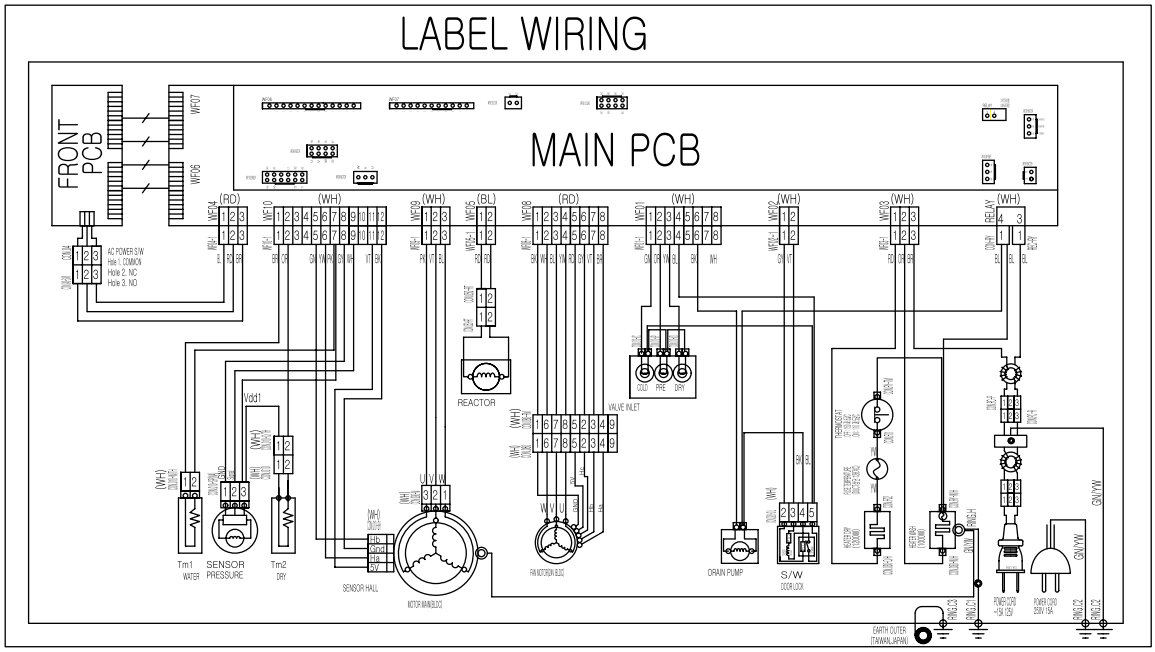

E1211R

DWD-E1221R: DOUBLE VALVE, BUBBLE

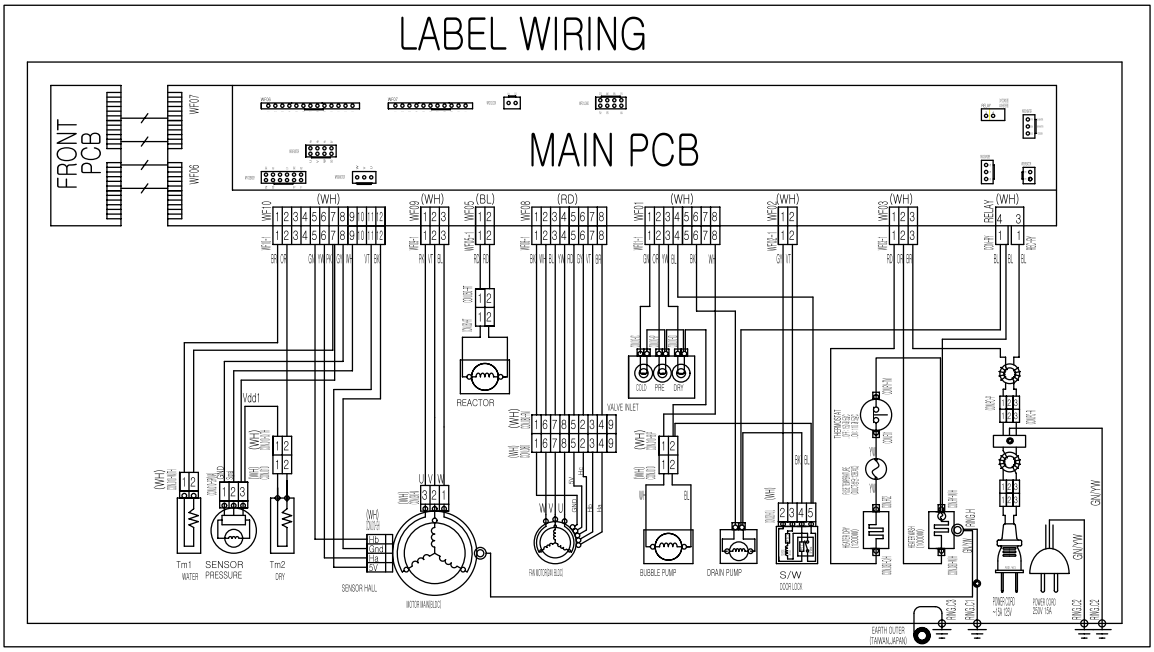

E1221R

DWD-E1221R: DOUBLE VALVE, N/BUBBLE

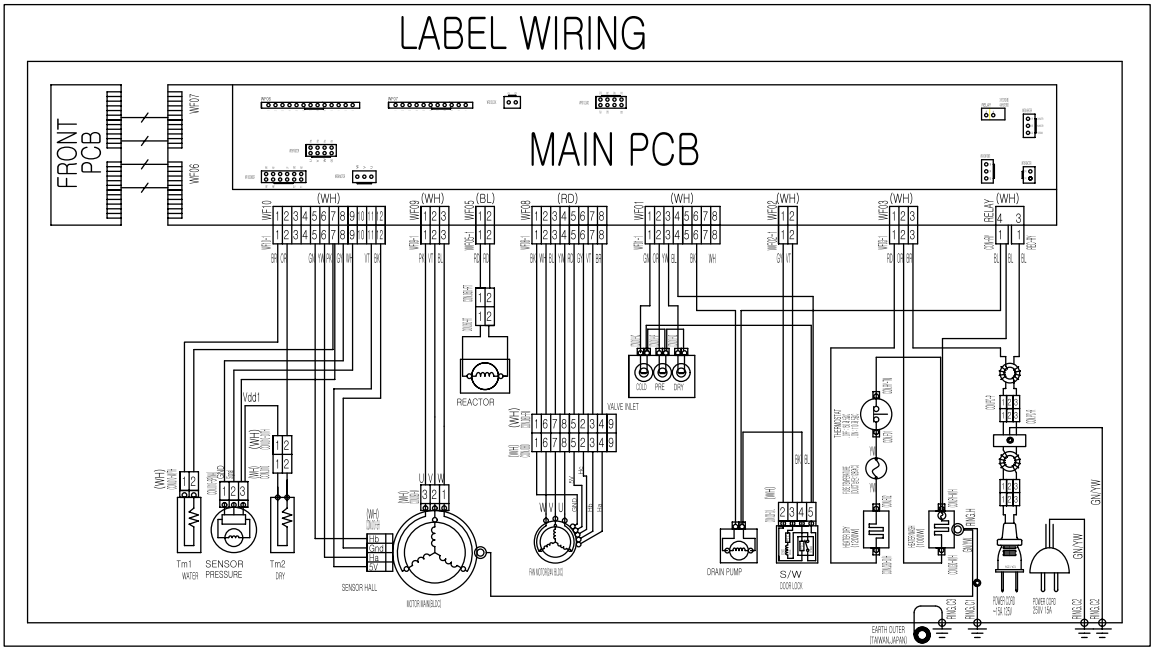

E1221R

DWD-E1211W: DOUBLE VALVE, BUBBLE

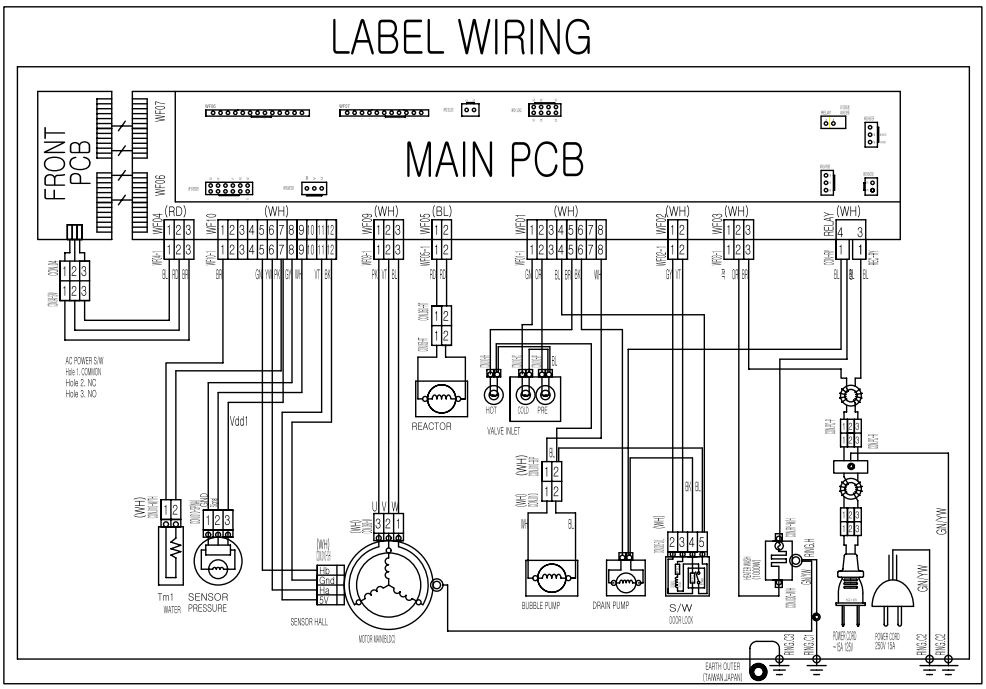

E1211W

DWD-E1211W: DOUBLE VALVE, N/BUBBLE

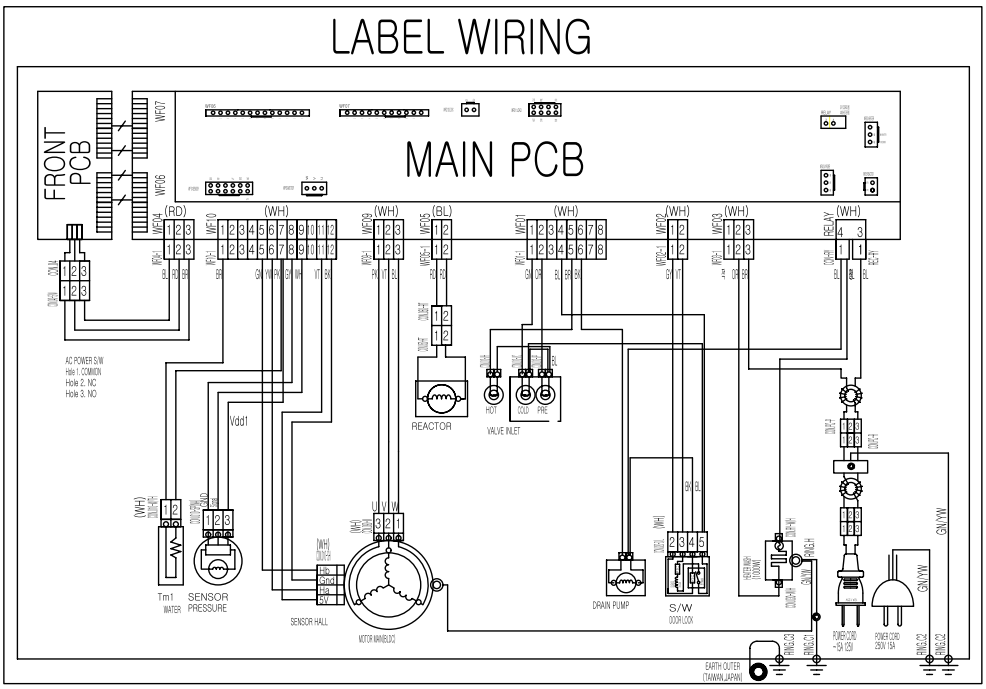

E1211W

DWD-E1221W: DOUBLE VALVE, BUBBLE

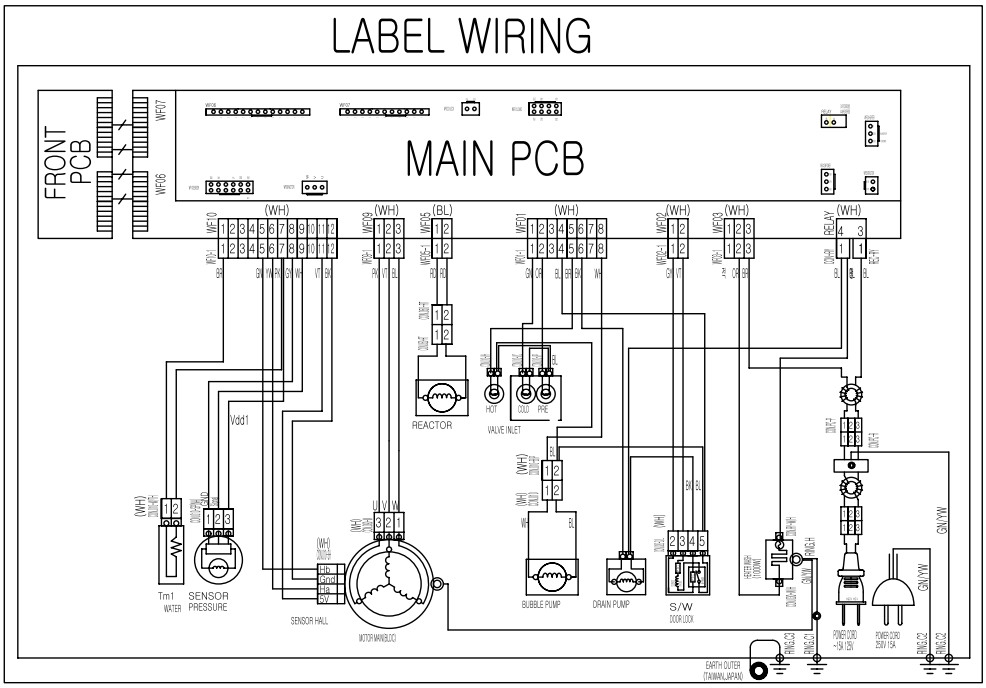

E1221W

DWD-E1221W: DOUBLE VALVE, N/BUBBLE

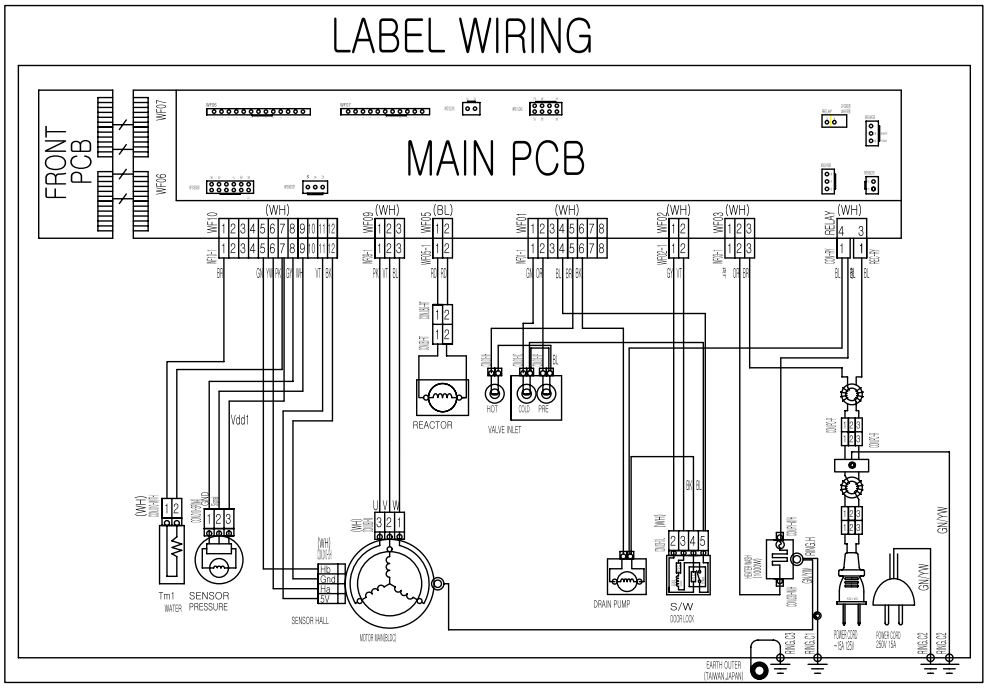

E1221W

DWD-E1211W: DOUBLE VALVE, BUBBLE

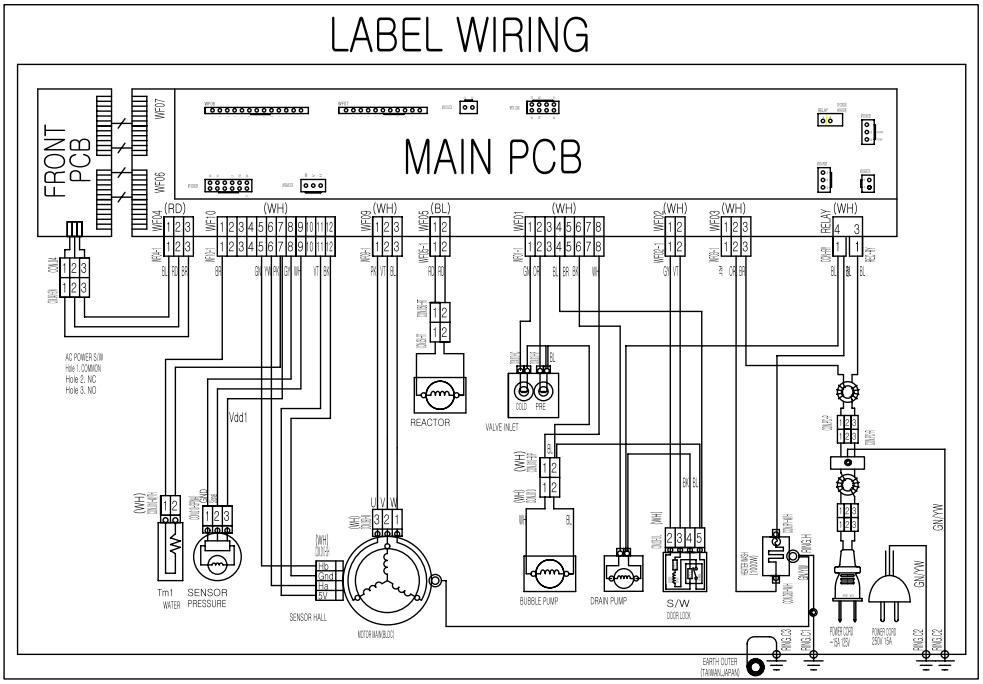

E1211W

DWD-E1211W: DOUBLE VALVE, N/BUBBLE

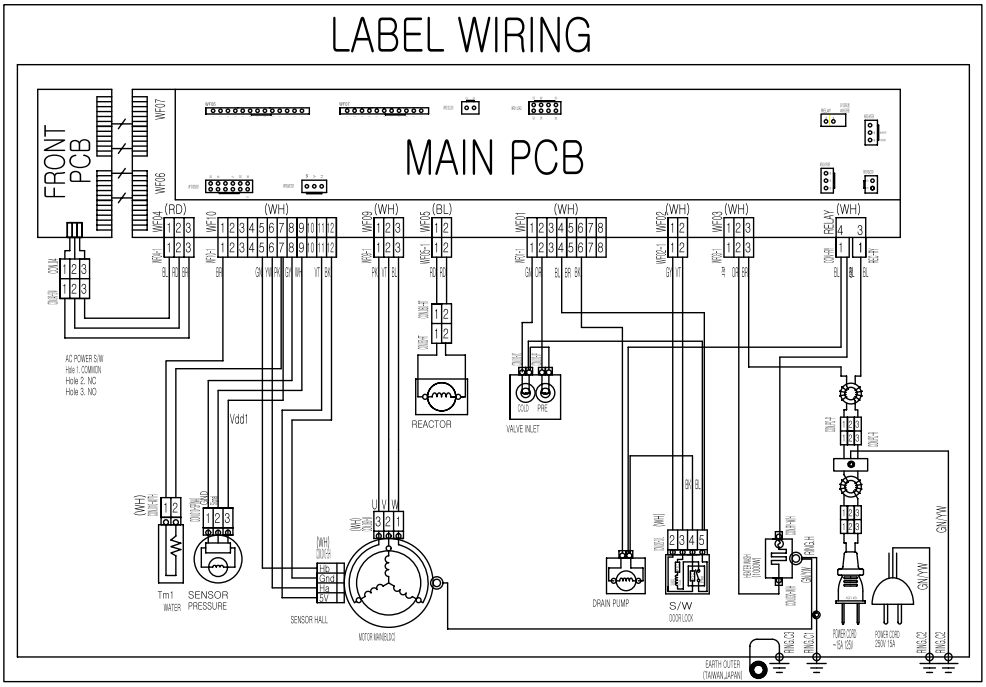

E1211W

DWD-E1221W: DOUBLE VALVE, BUBBLE

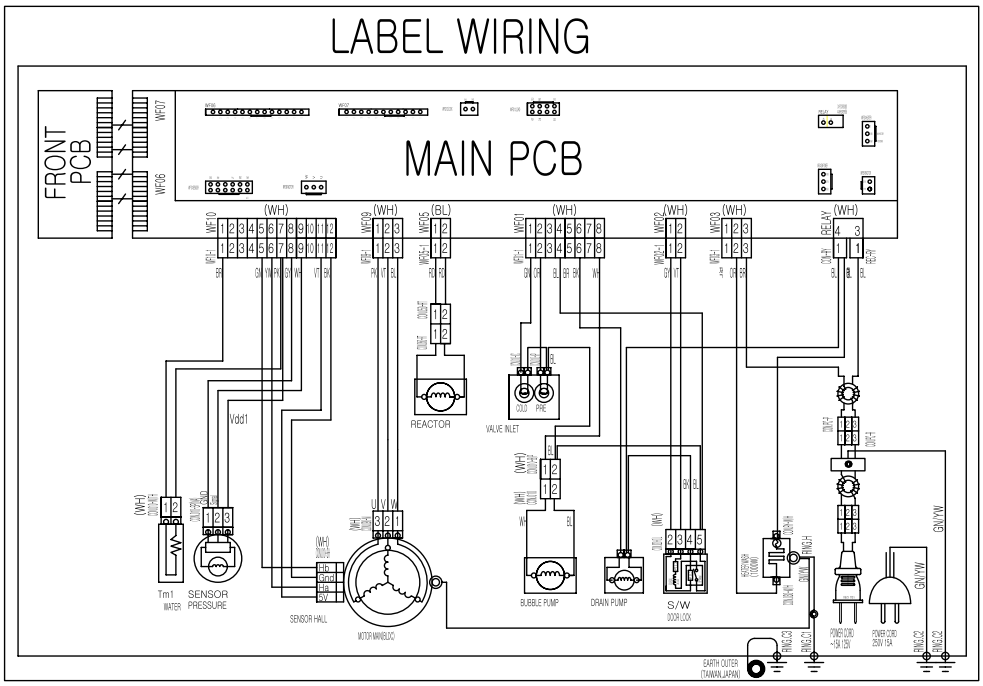

E1221W

DWD-E1221W: DOUBLE VALVE, N/BUBBLE

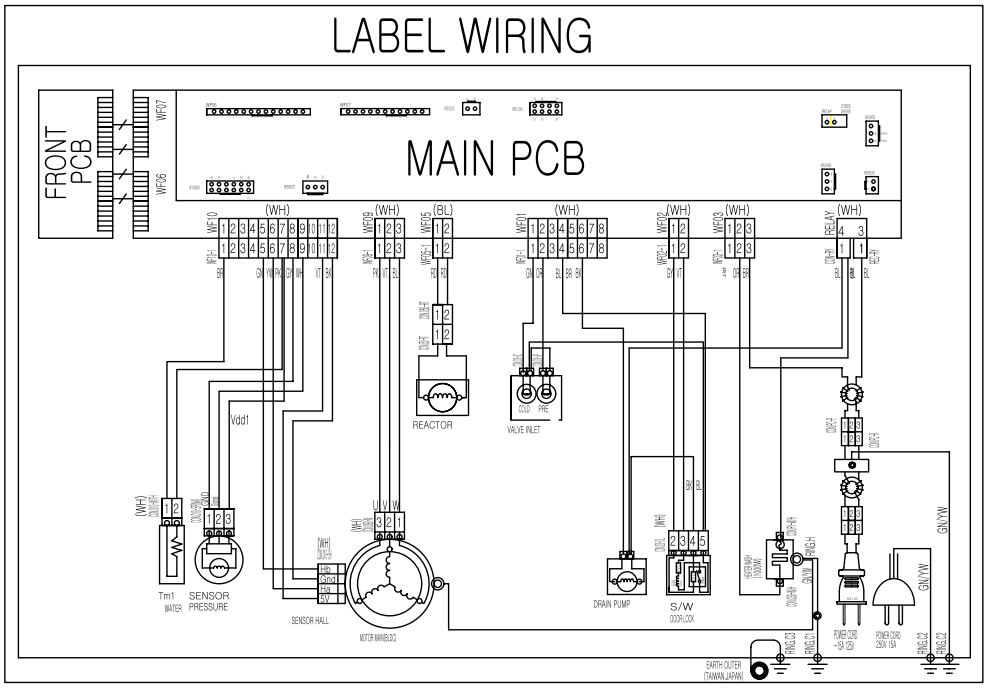

E1221W

8. TROUBLE SHOOTING REGARDING DRAIN

❑ Checking Methods

• Situation : * "OE" is shown on PCB.
* Not finishing drain during 10 min.
* The water level can not reach to RESET POINT during 10 min of drain.

Checking Methods	Replacing methods
* Check the hose drain O condition; twisted or frozen.	* replace HOSE DRAIN O
* Check the hose drain O condition, blocked. * DRAIN MOTOR is broken.	* clean the inside of Filter. * replace DRAIN MOTOR

9. INSTALLATION GUIDE

1. PARTS & CONFIGURATION

PARTS NAME	FIGURES	REMARKS
FIXTURE UP/DOWN AS	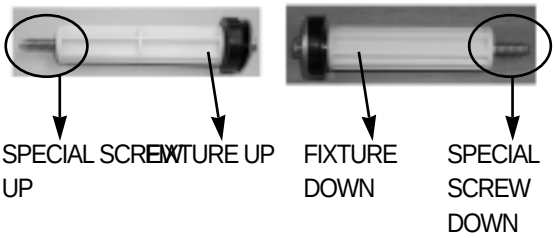	SPECIAL SCREW UP : L= 109mm SPECIAL SCREW DOWN :L=145mm
UNIT SERVICE WRENCH	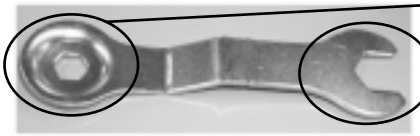	① Use this part to remove FIXTURE UP/ DOWN. ② Adjust leg with this part.
LEG ADJUST AS	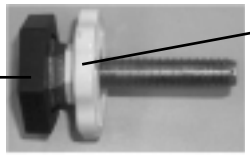	

2. INSTALLATION PROCESS

① Remove the FIXTURE UP/DOWN AS

Removal Method	Remarks
	☞ Disassemble the FIXTURE UP/DOWN AS by turning CCW direction. ☞ Please keep FIXTURE UP/DOWN AS for later use. ☞ When fixing FIXTURE UP/DOWN AS, turn it CW direction.

② Insert CAP HOLDER(4EA) after removing FIXTURE UP/DOWN AS.

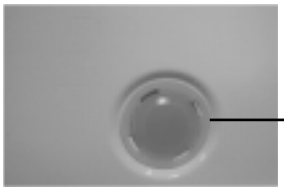

③Please install the DRUM WASHING MACHINE properly on even and hard floor as below.

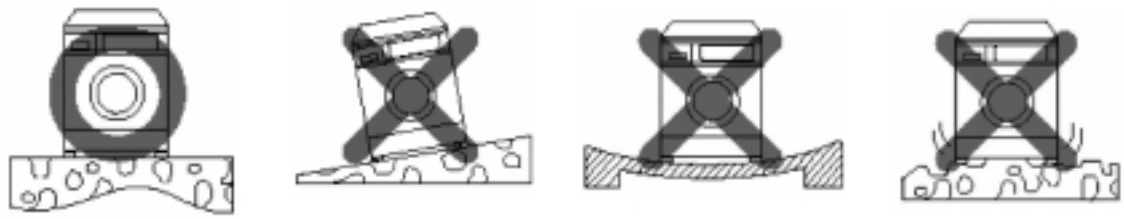

④Adjust the level of washer using LEG ADJUST AS.

Adjusting Method	Remarks
	☞ If turned CW, the LEG ADJUST AS moves the washer upward. ☞ If turned CCW, the LEG ADJUST AS moves the washer downward.

⑤After adjusting level, fix SPECIAL BOLT.

Adjusting Method	Remarks
	☆ Please fix the SPECIAL BOLT by rotating it CCW in order to prevent washer vibration.

10. ATTENTION POINT WITH SERVICING

No	Item	Part Name	Checking Point
1	Replacing Thermistor Dry	Thermistor Dry	Keep the Packing from seperating (Hold Packing when replacing) Keep the Packing from folding
2	Replacing Duct B As & Duct Pipe	DUCT B AS & DUCT PIPE	Check the sealing between Duct Pipe & Duct B AS
3	Replacing & Repairing Inlet Valve	Inlet Valve	Use only screw M4*8 for fixing Inlet Valve
4	Replacing Hose Drain	Hose Drain	Keep the sealing condition of Tub O tightly
5	Replacing HOSE A,B,C	HOSE A,B,C	Check the assembling order between INLET BOX & Hose A,C : Pre Wash-Cold
6	Replacing Heater Wash	Heater Wash	Unfastening the nut for fixing earth first then unfasten the nut for fixing heater
			At assembling the heater dry, check if the assembling condition between fixture heater is tight.(little gap on left & right)
			At fastening the nut for fixing the heater wash, keep the protrusion length of bolt to 10~12mm. (if under 10mm, water can leak, and if over 12mm, fixture heater can deform)
7	Replacing "Thermistor Wash"	Thermistor Wash	Unfasten the Nut for fixing heater, replace the thermistor, and fasten the nut for fixing heater
8	Assembling "Hinge Door"	Hinge Door	At fastening screw for fixing Door AS, be careful so that scratching at the related parts does not happen : If the scratching happens, it is possible to be claimed about appearance damage
9	(Dis)assembling "Door AS"	Door As	Be careful about the up/down direction of Door Glass : Keep the indication point of the part code downward.
10	(Dis)assembling "Motor AS"	MOTOR AS	To avoid the injury on the hand, grip the rim of the rotor At initiating the assembling operation of the stator, grip the stator and fasten the screw; at unfastening the screw, grip the stator so that it does not fall.

DWD-E1200R'S/E1200W'S(S/G)-2 2007.5.15 3:33 PM 페이지60

(주) 대우 일렉트로닉스

본사 : 서울 마포구 아현동 686
소비자상담실 : (대표) 360-8282
http://www.dwe.daewoo.co.kr

DRUM WASHING MACHINE

2005. 09