■ PANEL FRONT AS

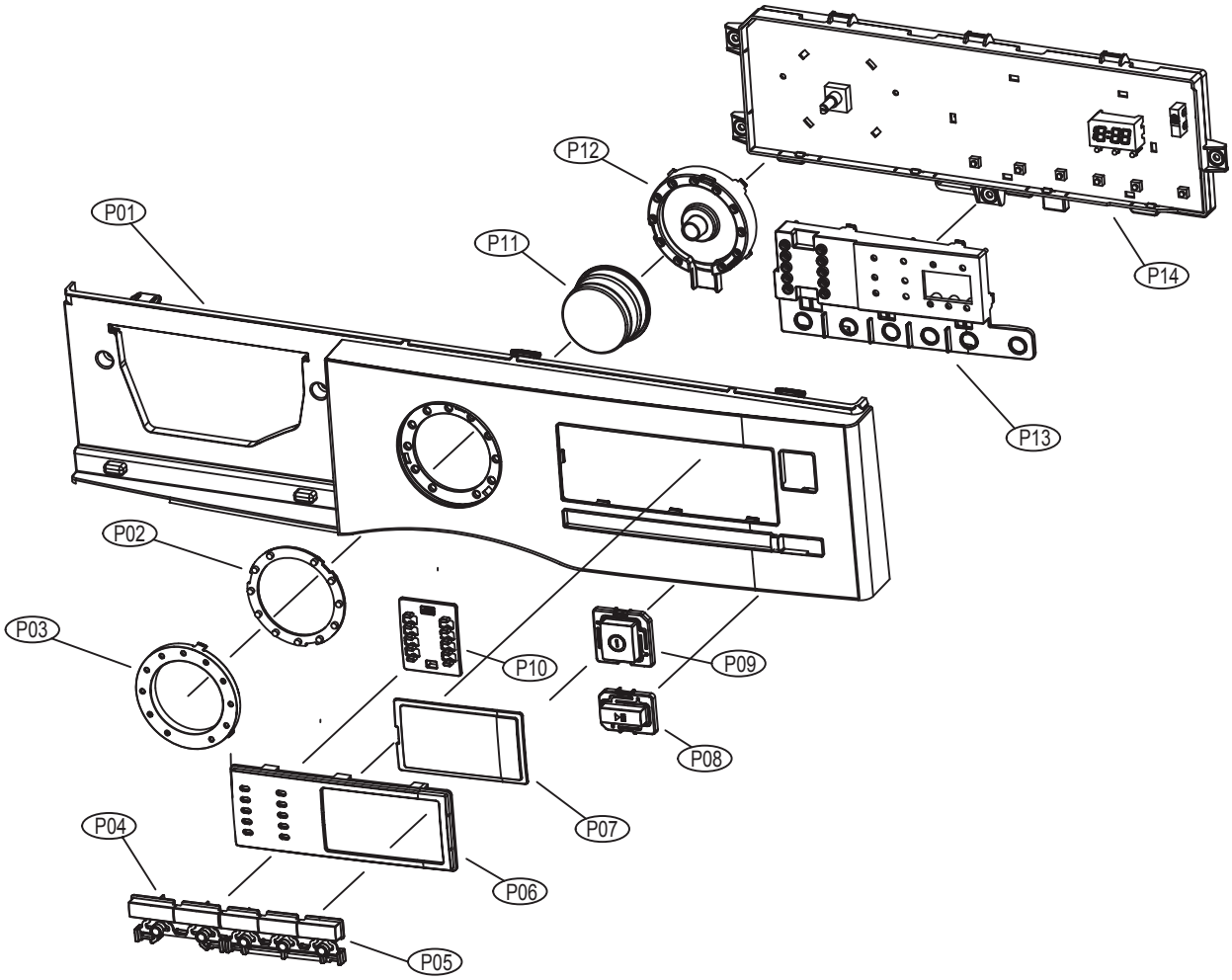

No.	PART NAME	PART CODE	SPECIFICATION	Q'TY	REMARK
P01	PANEL F	36142T4D00	ABS, D-H'S 1ST	1	
P02	DECO WINDOW	36116DWM00	ABS, D-H'S 1ST	1	
P03	DECO COURSE	36116DWN00	ABS, D-H'S 1ST	1	
P04	BUTTON OPTION	3616650000	ABS, D-H'S 1ST	1	
P05	BUTTON FUNCTION	3616650100	ABS, D-H'S 1ST	1	
P06	WINDOW COURSE	3615512800	ABS, D-H'S 1ST	1	
P07	WINDOW DISPLAY	3615512700	ABS(TR558), D-H'S 1ST	1	
P08	WINDOW FUNCTION	3615512600	ABS(TR558), D-H'S 1ST	1	
P09	BUTTON START	3616650200	ABS, D-H'S 1ST	1	
P10	BUTTON POWER	3616650300	ABS, D-H'S 1ST	1	
P11	KNOB DIAL	3613409700	ABS, D-H'S 1ST	1	
	DECO KNOB DIAL	36116DWP00	ABS, D-H'S 1ST	1	
P12	HOLDER COURSE	3613065800	HIPS, D-H'S 1ST	1	
P13	HOLDER FUNCTION	3613065700	HIPS, D-H'S 1ST	1	
P14	PCB AS	PRPSSWM010	D-HT1011 / HD1411	1	

■ CABINET FRONT AS

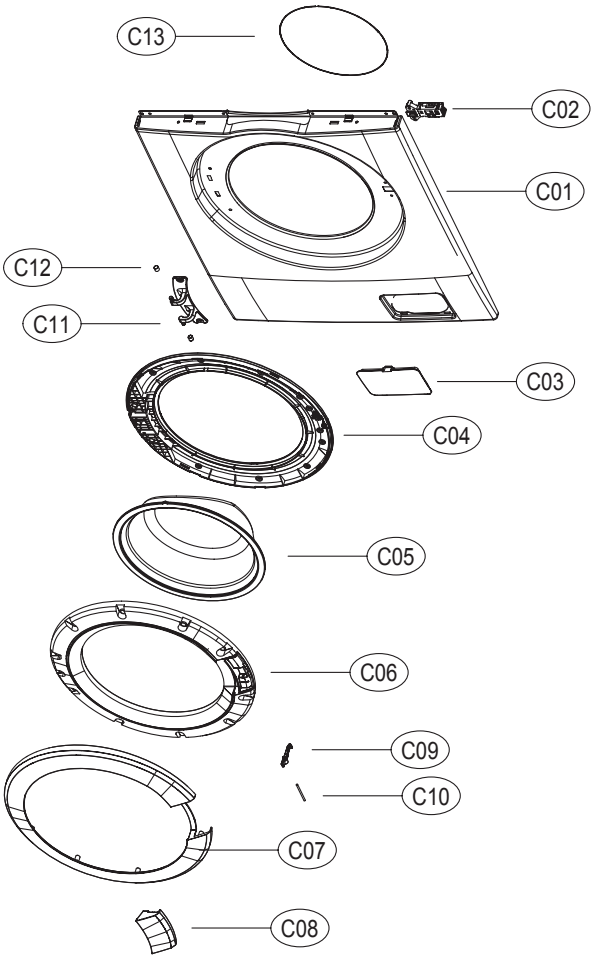

No.	PART NAME	PART CODE	SPECIFICATION	Q'TY	REMARK
C01	CABINET F	-	D-HT's/HD's	1	
C02	SWITCH DOOR LOCK	3619047100		1	
	SCREW TAPPING	7122401208	T2S TR4*12 SUS	2	
C03	COVER PUMP	3611433400	ABS, D-H'S	1	
C04	FRAME DOOR I	36122WD600	PP, D-H'S	1	
	SCREW TAPPING	7115402008	T1S FLT4*20 SUS	13	
C05	DOOR GLASS	361A11070T	GLASS PI300 M,F	1	
C06	FRAME DOOR O	36122WD700	ABS, D-H'S	1	
C07	DECO FRAME DOOR	36116DWK00	ABS, D-H'S	1	
C08	HANDLE DOOR	3612614700	ABS, D-H'S	1	
C09	HOOK DOOR	3613101900	ZNDC, D-H'S	1	
C10	PIN HANDLE	3618200210	SUS304, D3, L53	1	
	SPRING HOOK	3615119600	SUS D1.4	1	
C11	HINGE DOOR	3612904700	ALDC, D-H'S	1	
C12	CAP HINGE DOOR	3610916500	POM	1	
	SCREW TAPPING	3616030000	F/T BOLT(SE)5*12 SUS	2	
	NUT HEX	7S627W50X1		2	
C13	CLAMP DOOR AS	3611204810	HSW3, D=1.4 GS	1	

■ TUB ASS'Y

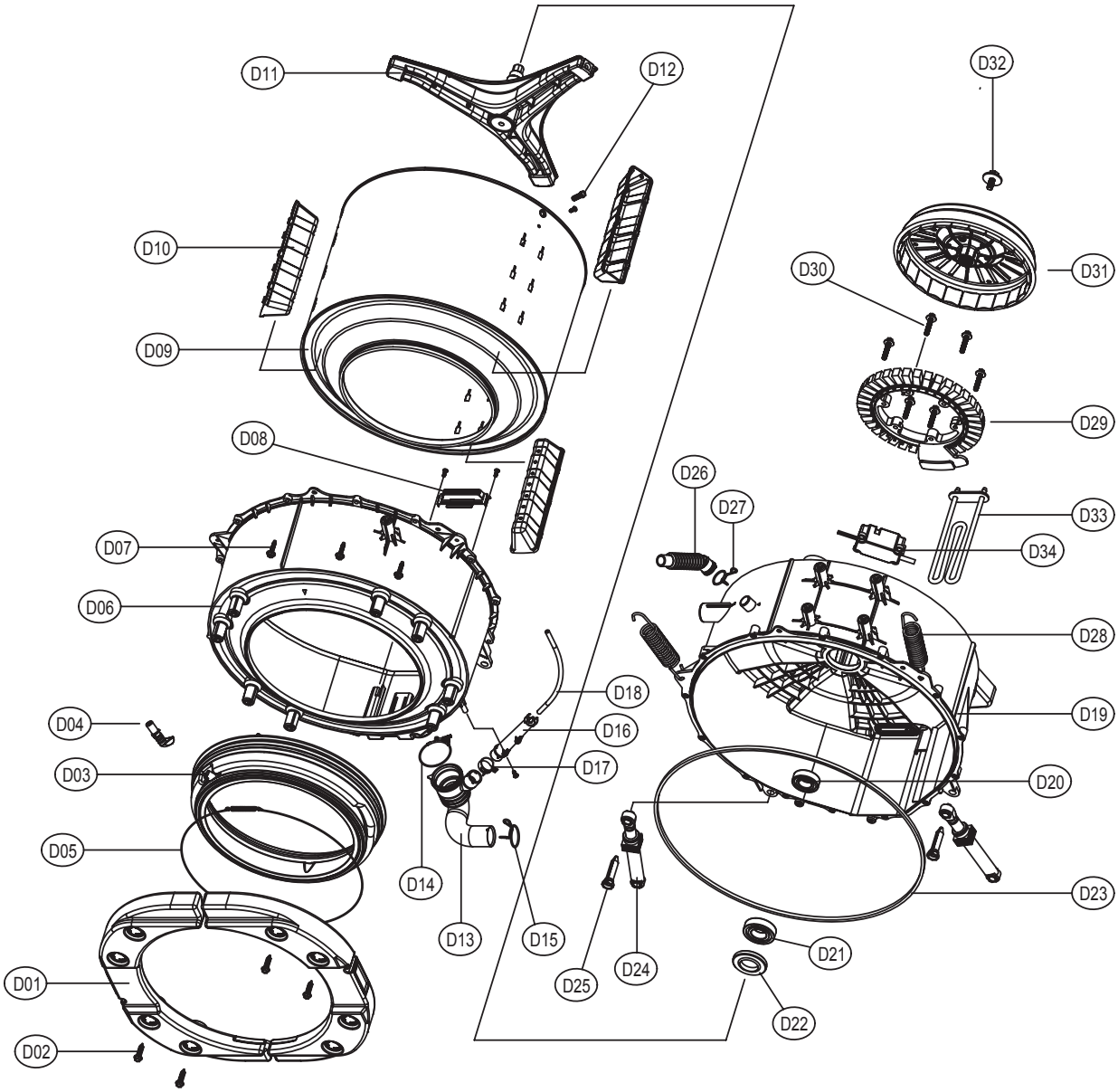
D11
D12
D32
D10
D30
D31
D09
D29
D08
D26
D27
D33
D07
D34
D06
D28
D18
D19
D04
D16
D17
D03
D20
D05
D14
D23
D13
D15
D21
D01
D25
D24
D22
D02

■ CABINET AS

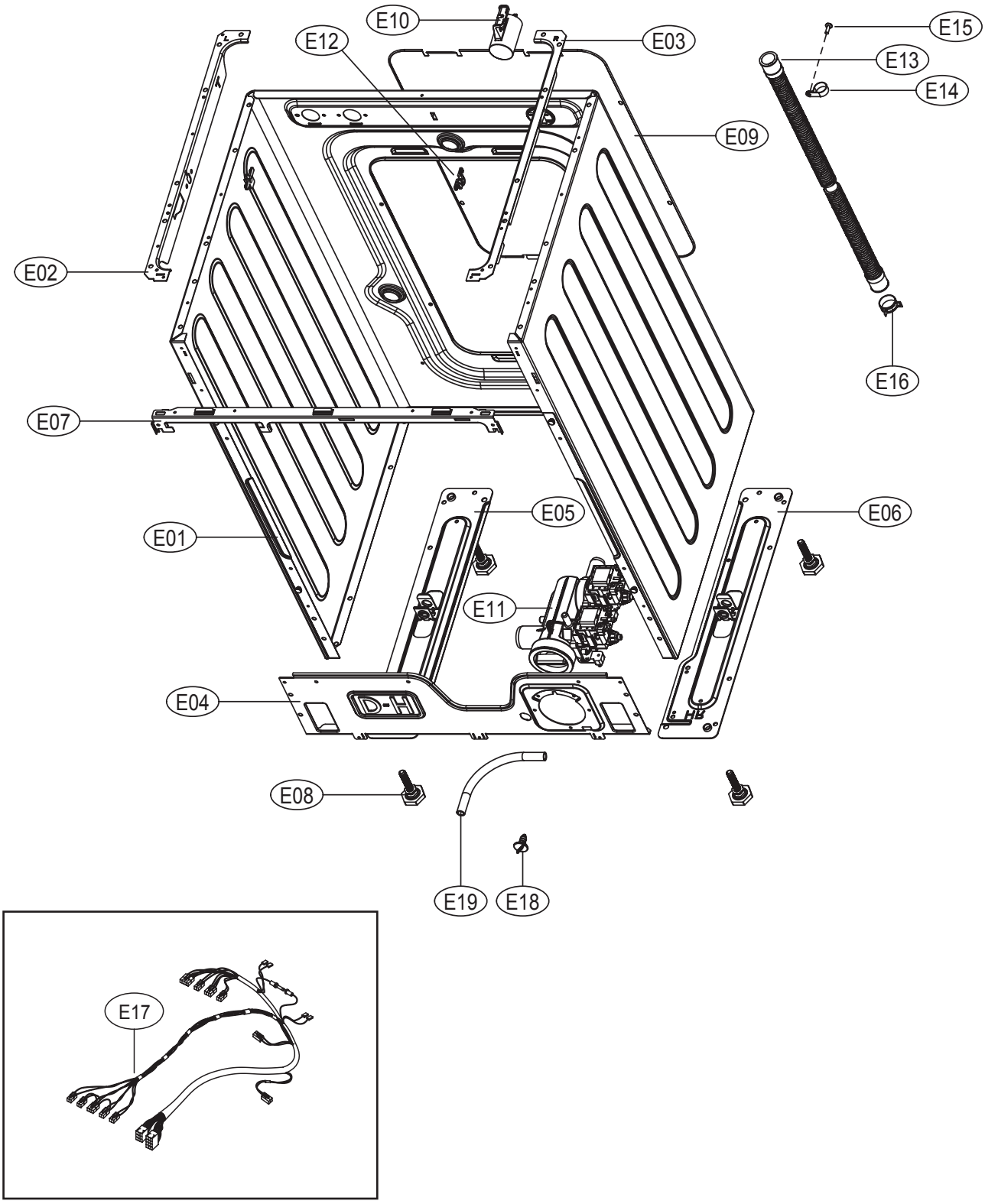
E10
E12
E03
E15
E13
E14
E09
E02
E16
E07
E05
E06
E01
E11
E04
E08
E19
E18
E17

■ PLATE T AS

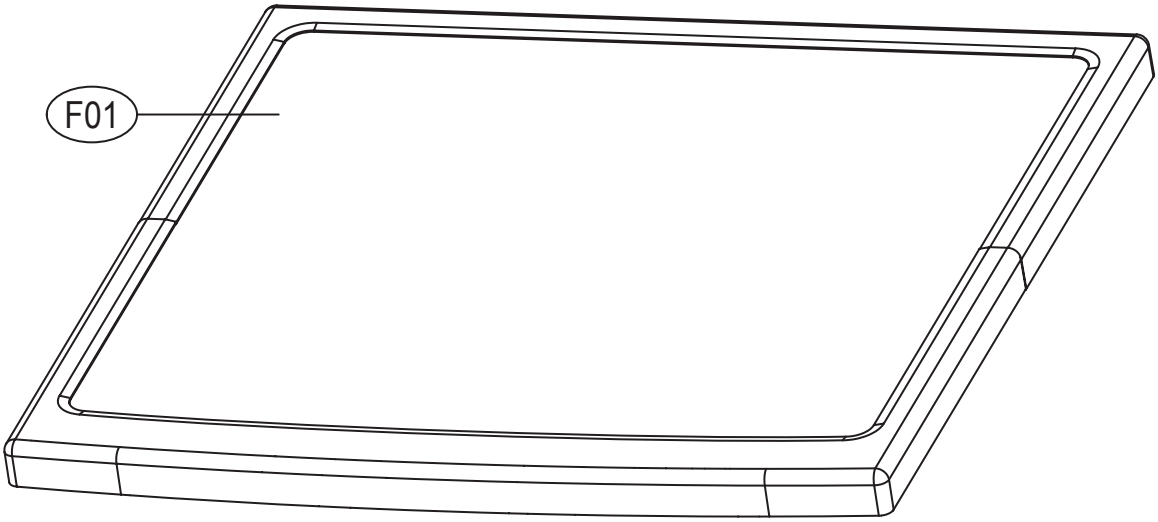

No.	PART NAME	PART CODE	SPECIFICATION	Q'TY	REMARK
F01	PLATE TOP AS	3614543400	D-H'S 1ST	1	
-	SCREW TAPPING	7122401411	T2S TRS 4*14 MFZN	2	