S/M No. : DWDLD14001

Service Manual

Drum Washing Machine

Model: DWD-L100 Series

? Caution

: In this Manual, some parts can be changed for improving, their performance without notice in the parts list. So, if you need the latest parts information, please refer to PPL(Parts Price List) in Service Information Center (http://svc.dwe.co.kr).

DAEWOO ELECTRONICS

Oct. 2009

DRUM WASHING MACHINE SERVICE MANUAL

1. WHAT IS DRUM WASHING MACHINE? 1

2. WASHER SPECIFICATION 2

3. PARTS LIST BY ASS'Y 4

4. CONTROL PART FUNCTION SPECIFICATION 23

5. ELECTRONIC FIELD PARTS LIST AND SPECIFICATION 38

6. WIRING DIAGRAM 39

1. WHAT IS DRUM WASHING MACHINE?

1. Drum Washing Machine

Water consumption is reduced by using the power of the laundry falling (free-fall) created when rotating the drum. With temperature control system, this drum washing machine saves energy and improves washing performance at the same time.

2. Key Features

◈ Waist Care
Designed by the waist, and the most comfortable angle eject into the laundry is convenient and easy to manipulate.

◈ Star Drum
Using Star Drum is able to show users higher Washing Performance and Minimal damage of laundry, water consumption.

◈ Luxury Audio Dial
Using the advanced Audio Dial is luxury design of exterior.

◈ DD inverter motor
The direct-drive type of which motor is directly connected to drum without an interim clutch, significantly reduces noise and vibration.

◈ Self-Cleaning Course of Drum.
Enables the machine to do Self-Cleaning of Drum.

◈ Digital Condensing Dry System.
Condensing Dry System with saveing energy.

3. Power System

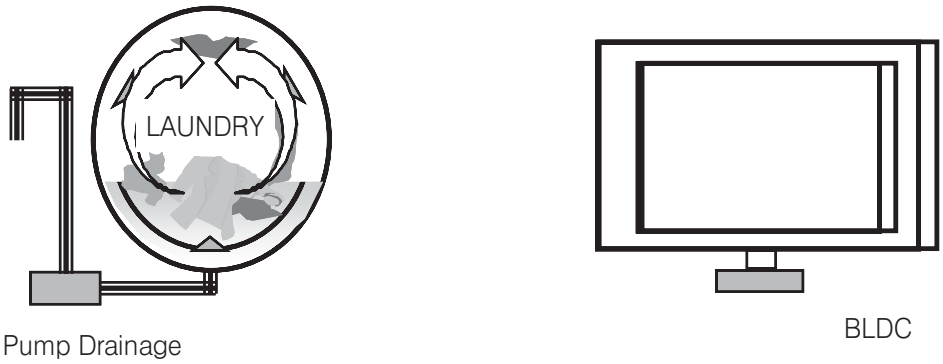

- DD Control: Direct drive type of direct connection between drum and motor
- Rotation by powerful high-performance BLDC motor

2. WASHER SPECIFICATION

1. Product Specification

■ 1st Model

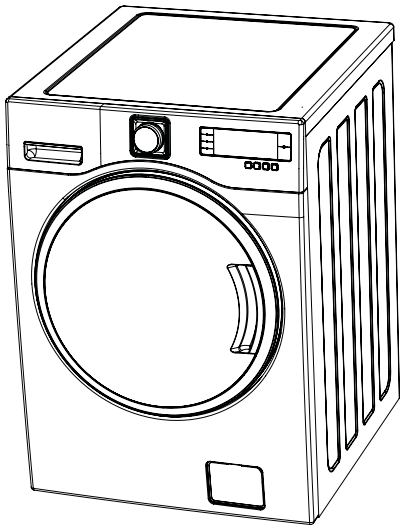

■ 2st Model

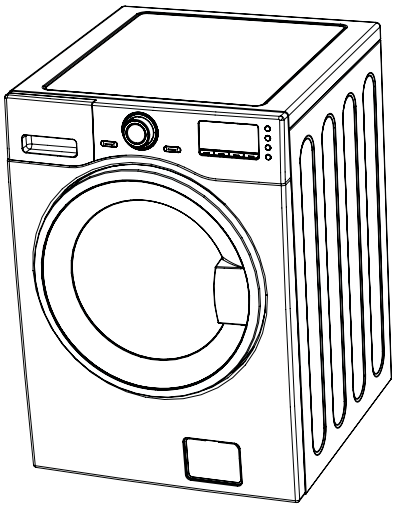

MODEL	DWC-LU1011/1211	DWD-LU1011/1211	DWC-LD1411/1611	DWD-LD1411/1611
Dimension (mm)	600 X 645 X 850			
Maximum mass of textile (kg)	9 Kg			
Unit Weight (net/gross)	78/82	71/75	76/80	69/73
Standard Water Consumption	65 ℓ			
Spin Speed (RPM)	DWC(DWD)-LU10XX : MAX 1000 DWC(DWD)-LU12XX : MAX 1200		DWC(DWD)-LD14XX : MAX 1400 DWC(DWD)-LD16XX : MAX 1600	
Operating Water Pressure	0.03MPa ~ 0.8MPa (0.3kgf/cm^2 ~ 8kgf/cm^2)			

3. PARTS LIST BY ASS'Y

1. PANEL AS

■ 1st Model

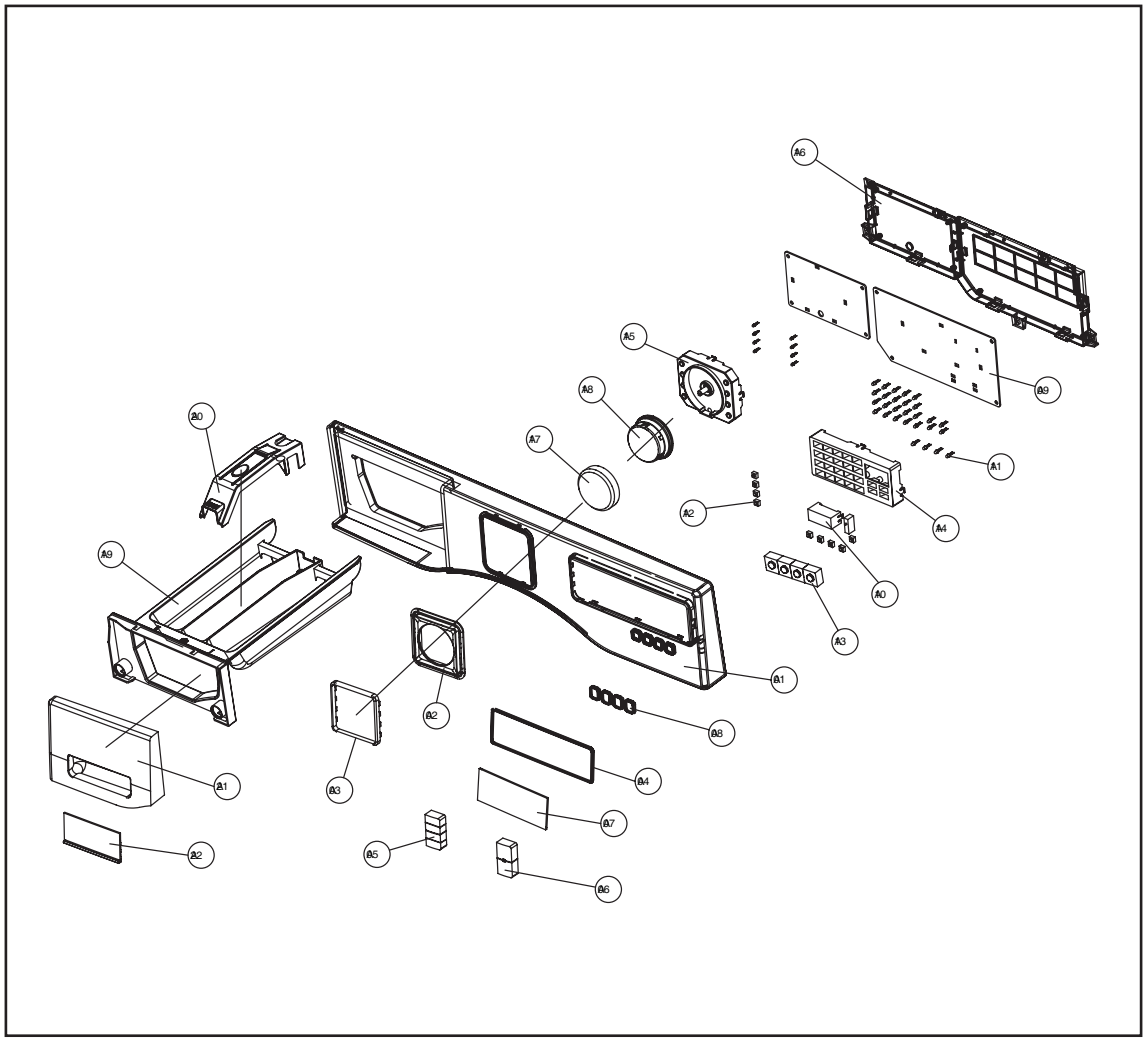

No.	PARTS NAME	CODE	SPECIFICATIONS	Q'TY	REMARK
A01	PANEL *F	36142T2000	ABS	1	
A02	DECORATOR WINDOW COURSE	3611696000	ABS	1	
A03	WINDOW COURSE	3615509200	C-LU1011	1	
A04	DECORATOR WINDOW DISPLAY	3611696100	ABS	1	
A05	BUTTON FUNCTION	3616644000	ABS	1	
A06	BUTTON PS	3616644100	ABS	1	
A07	WINDOW DISPLAY	3615509300	C-LU1011	1	
A08	BUTTON LED	3616644200	C-LU1011	1	
A09	PCB BOARD	3614347000	L SERIES FRONT PCB BOARD	1	
A10	CUSTOM LED	3613058300	C-LU1011	1	
A11	LED LAMP	DS0302WP--	9MM FORMING TYPE , D=3MM	36	
A12	SW TACT	5S50101402	2PIN, 6*6*5	9	
A13	HOLDER LED OPTION	3613058000	HIPS	1	
A14	HOLDER LED FUNCTION	3613058100	HIPS	1	
A15	HOLDER LED COURSE	3613058200	HIPS	1	
A16	CASE PCB F	36111T1N00	HIPS	1	
A17	BUTTON DIAL OUTER	3616643800	ABS	1	
A18	BUTTON DIAL INNER	3616643900	ABS	1	
A19	CASE DETERGENT	36111T1J00	PP	1	
A20	CAP SOFTENER	3610916600	PP	1	
A21	CASE HANDLE	3611149200	ABS	1	
A22	DECORATOR CASE HANDLE	3611696200	ABS	1	

2. PANEL F AS

■ 2st Model

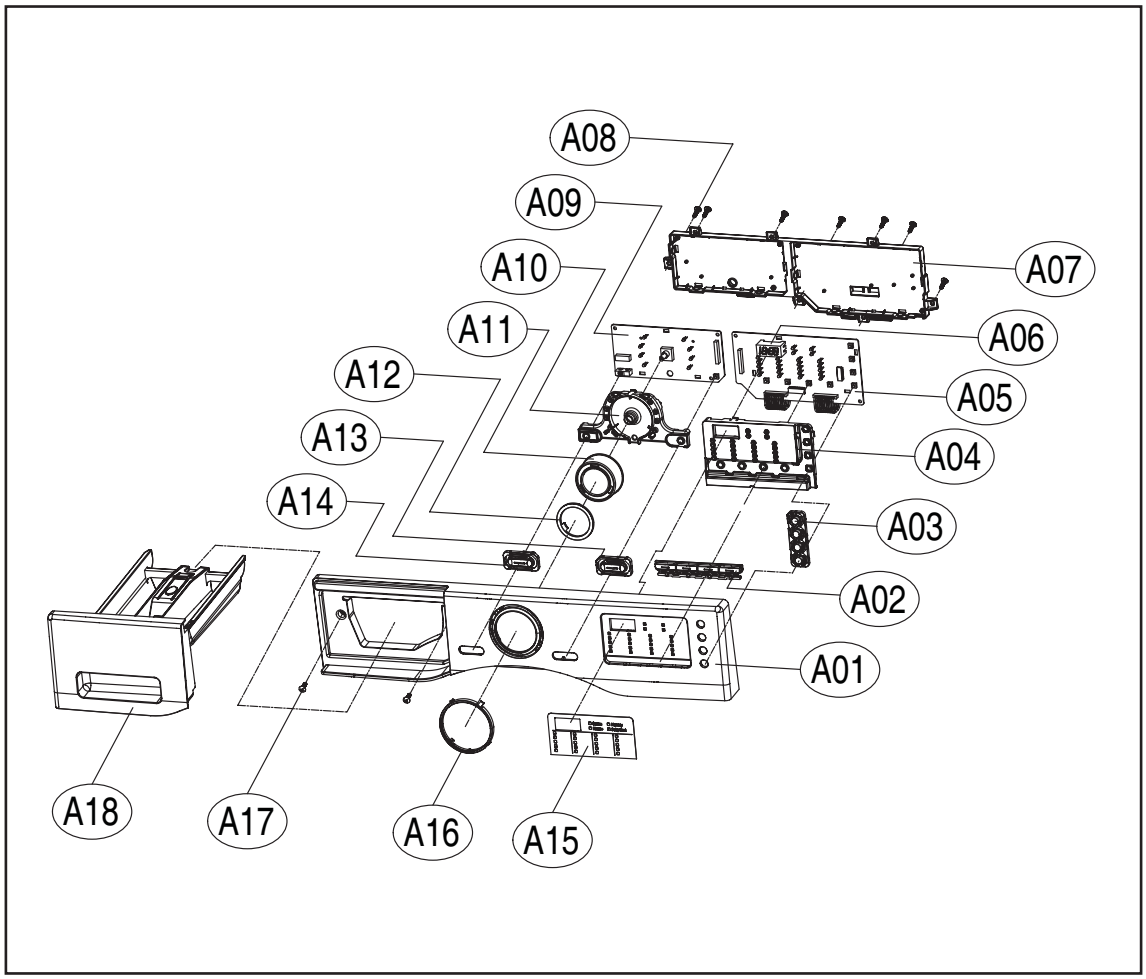

No.	PARTS NAME	CODE	SPECIFICATIONS	Q'TY	REMARK
A01	PANEL FRONT	36142T2100	ABS	2	4x16 SUS 430
A02	BUTTON FUNCTION	3616644400	ABS	1	
A03	BUTTON OPTION	3616644700	ABS	1	
A04	HOLDER LED FUNCTION	3613058500	HIPS	1	
A05	PCB F AS	PRPSSWL050	LD10/LU10,STANDBY 1W	1	
	PCB F AS	PRPSSWL051	LD12/LU12,STANDBY 1W	1	
	PCB F AS	PRPSSWL052	LD14,STANDBY 1W	1	
	PCB F AS	PRPSSWL053	LD16,STANDBY 1W	1	
	PCB F AS	PRPSSWL060	LD10/LU10,EC	1	
	PCB F AS	PRPSSWL061	LD12/LU12,EC	1	
	PCB F AS	PRPSSWL062	LD14,EC	1	
	PCB F AS	PRPSSWL063	LD16,EC	1	
A06	HOLDER LED DISPLAY	3613058600	ABS	1	
A07	CASE PCB F	36111T1R00	HIPS	1	
A08	SCREW TAPPING	7122401611	T2S TRS	1	4x16 MFZN
A09	PCB BOARD F	3614348500	FR-1	1	
A10	HOLDER LED COURSE	3613058400	HIPS	1	
A11	BUTTON DIAL	3616644300	ABS	1	
A12	DECORATOR BUTTON DIAL	3611696400	ABS	1	CHROMIUM CILDING
A13	BUTTON START	3616644600	ABS	1	
A14	BUTTON POWER	3616644500	ABS	1	
A15	DECORATOR FILM	3611696500	P.C FILM	1	
A16	WINDOW COURSE	3615509400	TR-ABS	1	
A17	SCREW TAPPING	7122401608	T2S TRS	1	
A18	CASE DETERGENT AS	36111T1P10	PP	1	

3. INLET BOX AS

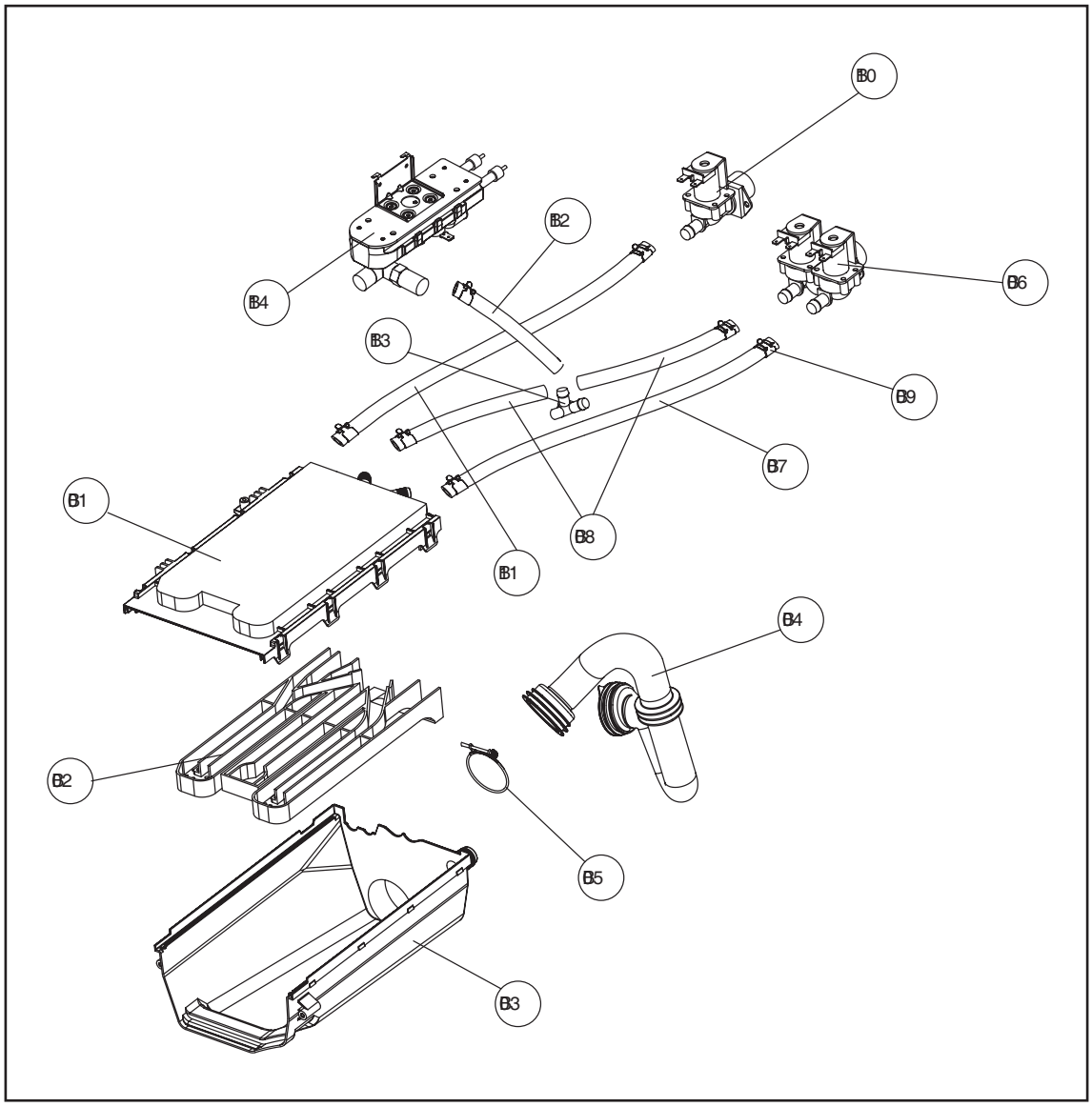

No.	PARTS NAME	CODE	SPECIFICATIONS	Q'TY	REMARK
B01	NOZZLE *T	3618111100	PP	1	
B02	NOZZLE *U	3618111000	PP	1	
B03	BOX INLET	3610526500	PP	1	
B04	HOSE INLET	3613274600	EPDM	1	
B05	CLAMP AS	3611203200	ID=60, WIRE+GUIDE+BOLT+NUT	1	
B06	VALVE INLET	3615416821	220-240V.VDE.BITRON.	1	
B07	HOSE WATER SUPPLY	3613270900	EPDM ID9.5 OD14.5, WASHING	1	
B08	HOSE WATER SUPPLY	3613270900	EPDM ID9.5 OD14.5, PRE.WASH	2	
B09	CLAMP HOSE	3611205800	100H, ID=13.8 W=10.0 0.9T	10	
B10	VALVE INLET	3615414820	220-240V,1-WAY HOT PP	1	
B11	HOSE WATER SUPPLY	3613270900	EPDM ID9.5 OD14.5, HOT	1	
B12	HOSE WATER SUPPLY	3613270900	EPDM ID9.5 OD14.5, STEAM	1	
B13	PIPE JOINT I	3614426000	PP	1	
B14	Unit Steam AS	36189M2U00	L-SERIES STEAM UNIT 900W	1	option

4. CABINET F ASSY

■ 1st Model

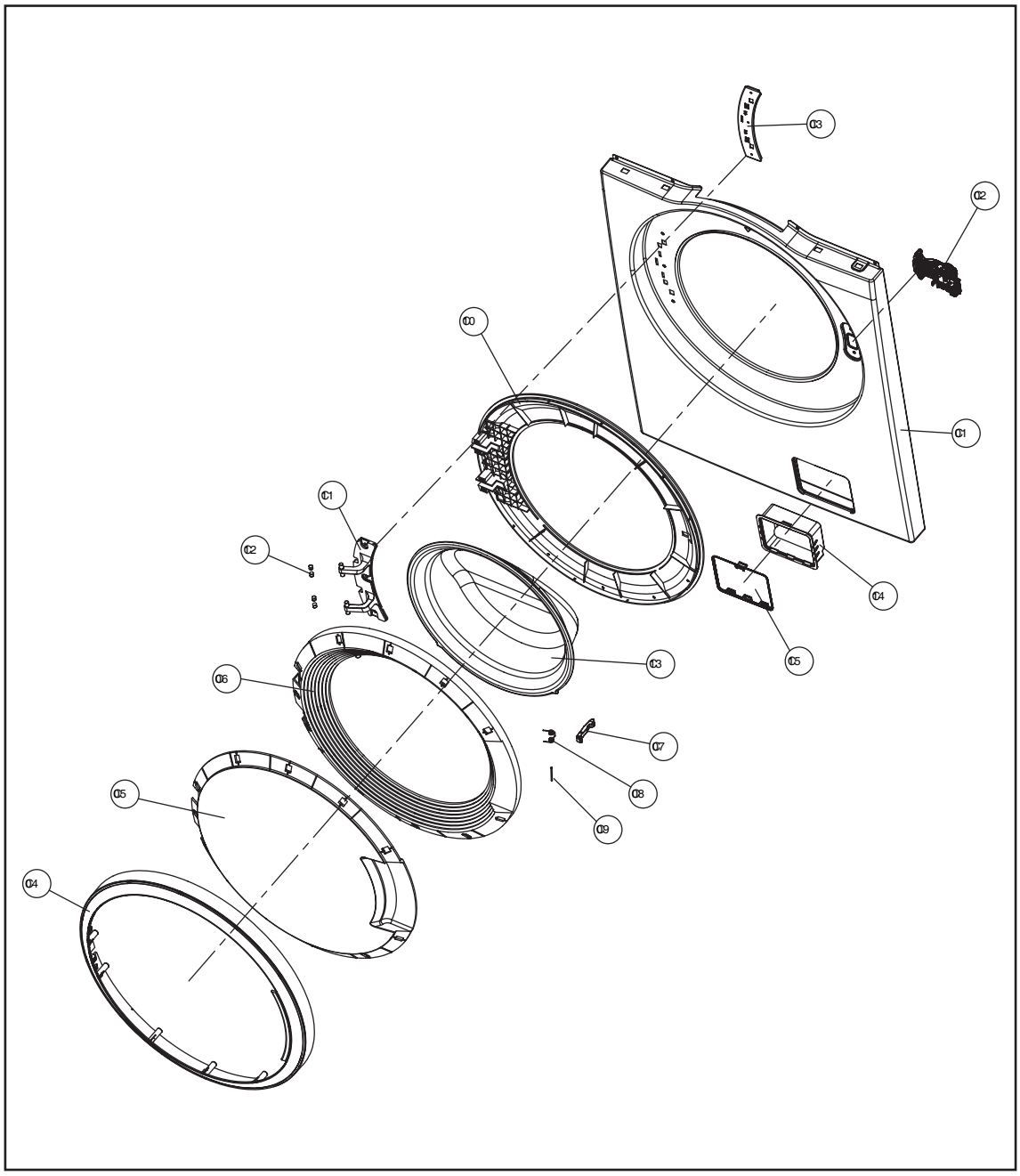

No.	PARTS NAME	CODE	SPECIFICATIONS	Q'TY	REMARK
C01	CABINET *F	3610814000	SECD 0.8T	1	
C02	SWITCH DOOR LOCK	3619047200	DL-S1.250V16A.BITRON	1	
C03	PLATE HINGE SUPPORT	3614539800	SPG 0.8T, DWD-T110R	1	
C04	FRAME DOOR *O	36122UD800	ABS	1	
C05	PROTECTOR GLASS	3618345500	ABS	1	
C06	DECORATOR DOOR *O	3611695900	ABS	1	
C07	HOOK DOOR	3613100900	ZNDC	1	
C08	SPRING HOOK	3615115400	SUS304,	1	
C09	HOOK SHAFT	3613101000	SUS, D=3.0	1	
C10	FRAME DOOR *I	36122UD600	PP	1	
C11	HINGE DOOR	3612903800	AL, DWD-T110R	1	
C12	CAP HINGE DOOR	3610916500	POM	4	
C13	DOOR GLASS	361A113300	GLASS	1	
C14	CASE PUMP	36111T1K00	PP	1	
C15	COVER PUMP	3611431500	ABS	1	

5. DOOR AS

■ 2st Model

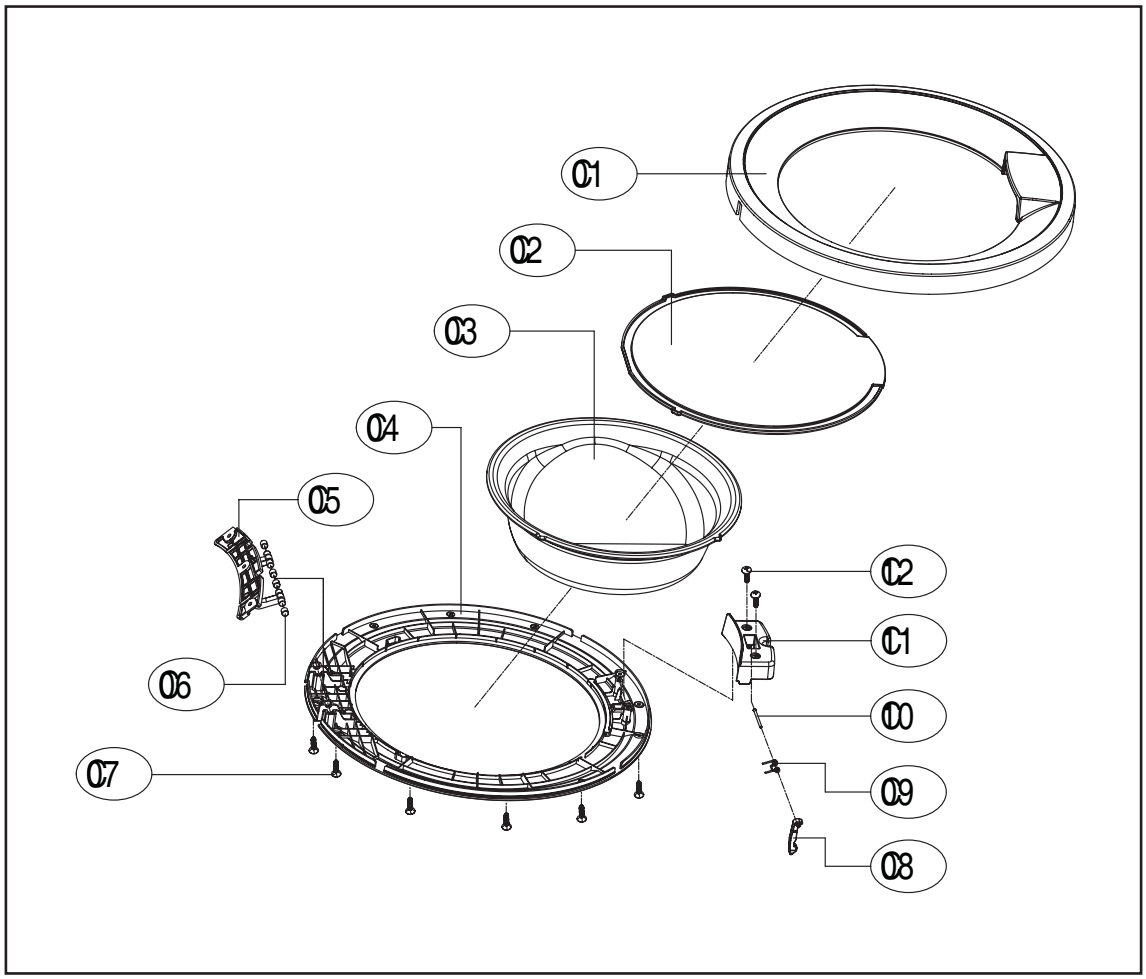

No.	PARTS NAME	CODE	SPECIFICATIONS	Q'TY	REMARK
C01	FRAME DOOR 0	36122UDC00	ABS	1	
C02	PROTECTOR GLASS	3618345600	TR-ABS	1	
C03	DOOR GLASS	361A113300	GLASS	1	
C04	FRAME DOOR 1	36122UDD00	PP	1	
C05	HINGE DOOR	3612903800	ALDC	1	
C06	CAP HINGE DOOR	3610916500	POM	4	
C07	SCREW TAPPING	7115402029	T1S FLT	14	4*20 STS430 NATURE
C08	HOOK DOOR	3613100900	ZNDC	1	
C09	SPRING HOOK	3615115400	SUS	1	
C10	KOOK SHAFT	36131101000	SUS	1	
C11	CASE SPRING DOOR	3611149300	ABS	1	
C12	SCREW TAPPING	7122401611	T2STRS	2	4*6 MFZN

6. TUB ASSY(UNIVERSAL)

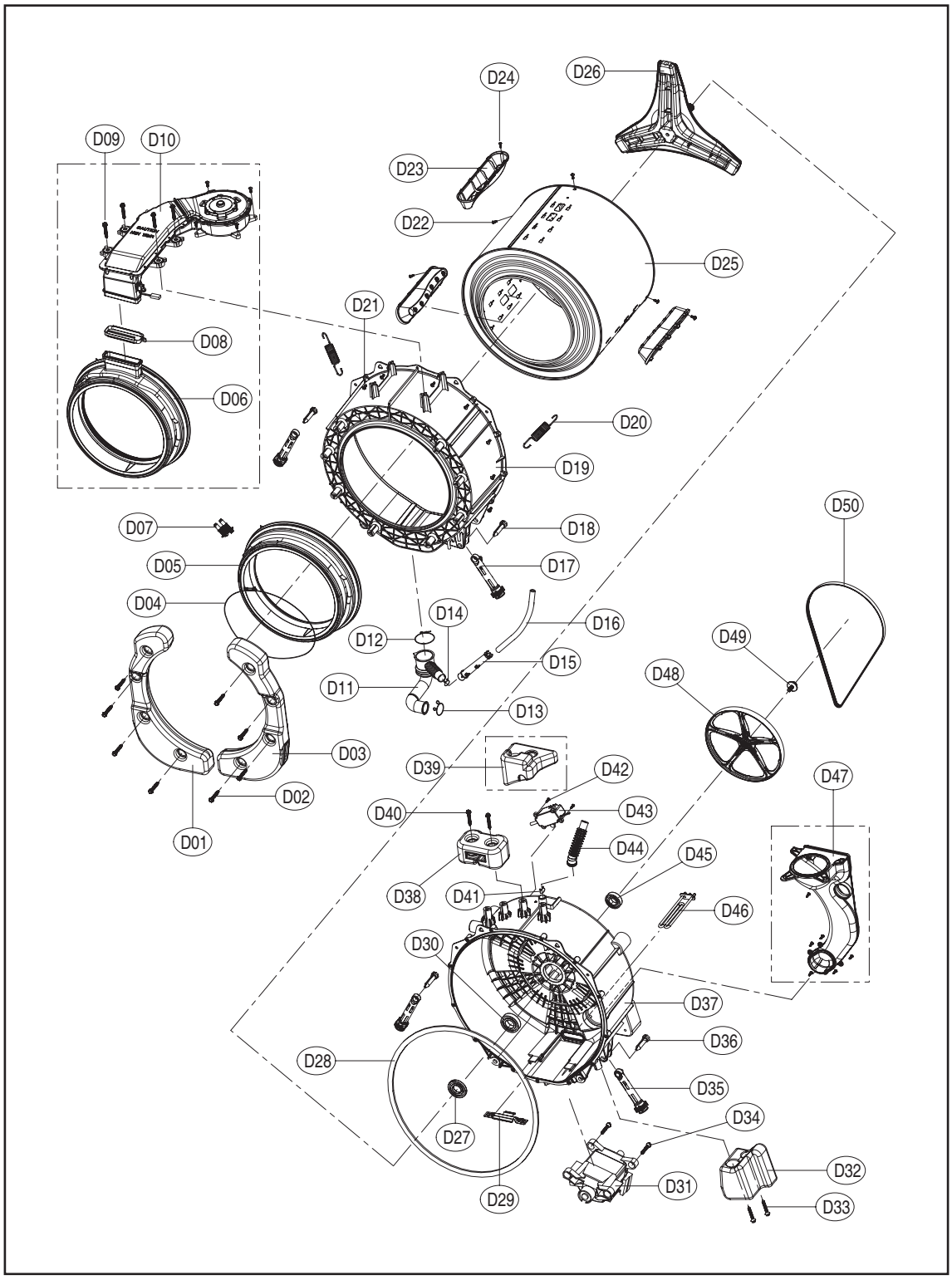

No.	PARTS NAME	CODE	SPECIFICATIONS	Q'TY	REMARK
D01	BALANCER WEIGHT L	3616110600	PP, D-LU1011, 6.6KG	1	
D02	SPECIAL SCREW	3616029400	SWCH 8.5X30	8	
D03	BALANCER WEIGHT R	3616110500	PP, D-LU1011, 6.6KG	1	
D04	CLAMP GASKET AS	3611207000	C-LU1011	1	
D05	GASKET	3612325300	EPDM , WASH , D-LU1011	1	FOR WASH
D06	GASKET	3612325400	EPDM , DRY , C-LU1011	1	FOR DRY
D07	NOZZLE SHOWER	3618111200	PP	1	
D08	CLAMP GASKET BUSHING	3611206800	GI 1.2T	1	FOR DRY
D09	SPECIAL SCREW	3616029810	SWCH 6.5X45	4	
D10	DUCT B AS	3610DUTL00	C-L E	1	FOR DRY
D11	HOSE DRAIN *I	3613275200	EPDM D-LU1011	1	
D12	CLAMP AS	3611203210	ID=61, WIRE+GUIDE+BOLT, GS	1	
D13	CLAMP HOSE	3611204700	D26	1	
D14	CLAMP HOSE	3611201401	HSW3,YW,D2.6,ID36,W44.5	1	
D15	AIR TRAP	361A500101	PP	1	
D16	HOSE AIR(PRESSURE)	3613266930	ID=4,OD=8, L=680MM(L-SERIES)	1	
D17	DAMPER FRICTION	361A700110	70N AKS ST=170-260 DL=197.5 LOW NOISE	2	
D18	DAMPER PIN	361A700200	AKS D=14.5	2	
D19	TUB FRONT	3618830000	FRPP, C-LU1011	1	
D20	SPRING SUSPENSION	3615116800	KGF	2	
D21	SPECIAL SCREW	3616029800	SWCH 6.5X30	14	
D22	SPECIAL SCREW	3616029500	SUS430 8*25	3	
D23	LIFTER WASH	361A401300	PP,1PIECE,TWIST	3	
D24	SCREW TAPPING	7122401408	T2S TRS 4X14 SUS,STS	3	
D25	DRUM AS	3617012500	D-LU1011	1	
D26	SPIDER AS	361A301200	D-LU1011	1	
D27	WATER SEAL	361A600100	NBR	1	
D28	SEALING TUB	3612321601	EPDM L1600(-0~ +10)	1	
D29	FIXTURE HEATER	3612006700	SUS	1	
D30	BEARING INNER	3616303100	6206Z	1	
D31	UNIT MOTOR UNIVERSAL	36189L4H10	DC220/50 G&J 2P PI340 45T(CCA)	1	
D32	BALANCER WEIGHT LOWER	3616110300	PP, D-LU1011, 3.5KG	1	
D33	SPECIAL SCREW	3616029400	SWCH 8.5X30	2	
D34	SPECIAL SCREW	3616062800	SWRCH18A 7.4*25.5	2	
D35	DAMPER FRICTION	361A700130	60N AKS ST=170-260 DL=197.5 LOW NOISE	2	
D36	DAMPER PIN	361A700200	AKS D=14.5	2	
D37	TUB REAR AS	36100T1400	D-LU1011	1	
D38	BALANCER WEIGHT T	3616110400	PP, C-LU1011, 2.48KG	1	FOR DRY
D39	BALANCER WEIGHT T(WASH)	3616110700	PP, D-LU1011, 2.48KG	1	FOR WASH
D40	SPECIAL SCREW	3616029400	SWCH 8.5X30	2	
D41	CLAMP HOSE	3611204700	D26	1	
D42	SPECIAL SCREW	3616007400	T2S TRS 4X10+24	2	OPTION
D43	UNIT BUBBLE PUMP AS	36189L4120	220-240V DBK-240DB RP CHSHION	1	OPTION
D44	HOSE VENT	3613267100	EPDM	1	
D45	BEARING OUTER	3616303200	6205Z	1	
D46	HEATER WASH	3612803700	230V 2000W.1R5A721002.IRCA FUSE 2EA	1	
D47	PIPE DUCT AS	3614414001	C-L PIPE DUCT+HOSE+CLAMP	1	FOR DRY
D48	PULLEY	3618434100	ALDC	1	
D49	SPECIAL BOLT AS	3616029600	SWCH 10*30,F/L BOLT S.P/W SEAL LOCK	1	
D50	BELT V	3616591120	GATES 4PJ1175 BUTADIENE RUBBER	1	

7. TUB ASSY(DD MOTOR)

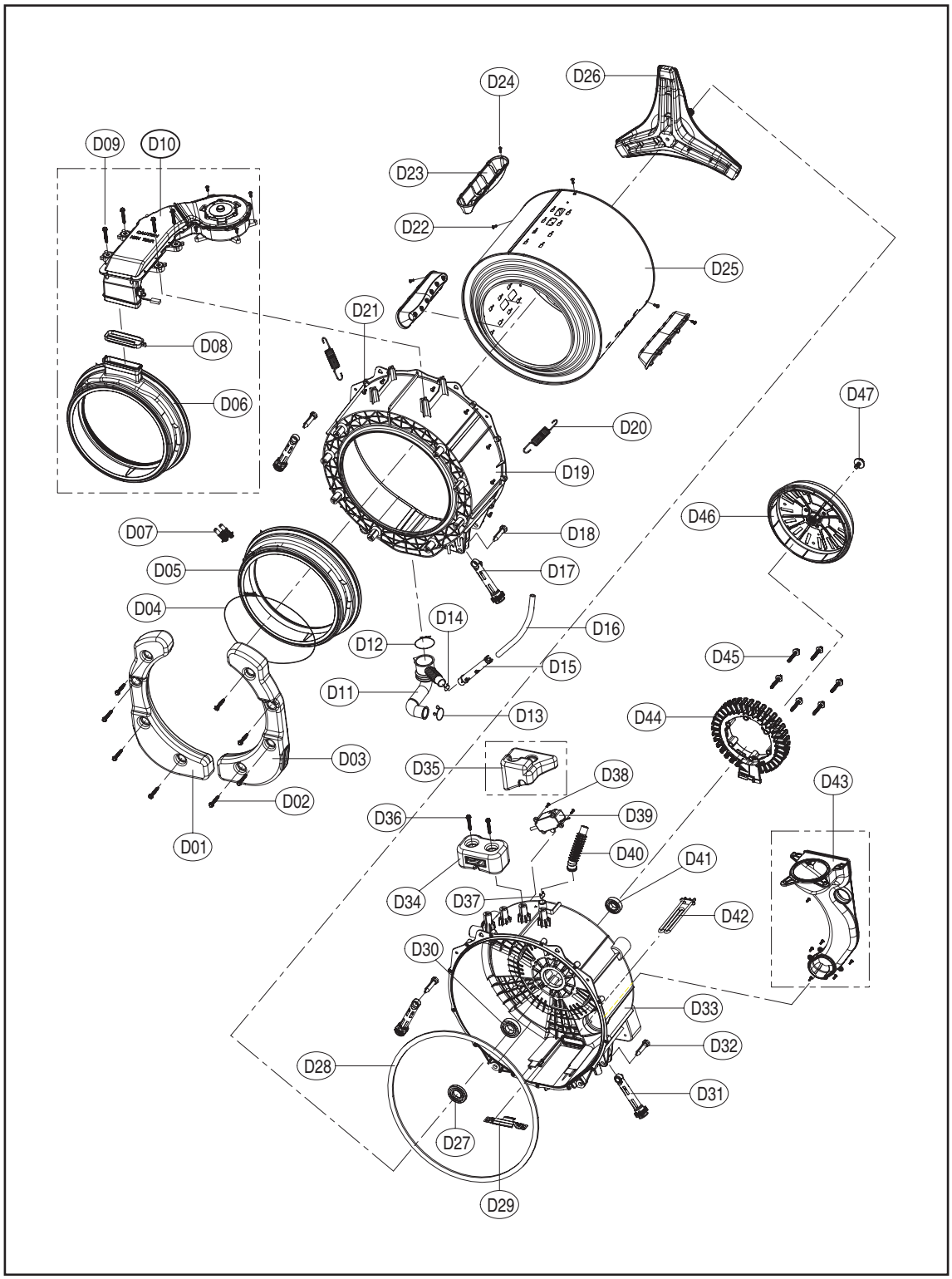

No.	PARTS NAME	CODE	SPECIFICATIONS	Q'TY	REMARK
D01	BALANCER WEIGHT L	3616110600	PP, D-LU1011, 6.6KG	1	
D02	SPECIAL SCREW	3616029400	SWCH 8.5X30	8	
D03	BALANCER WEIGHT R	3616110500	PP, D-LU1011, 6.6KG	1	
D04	CLAMP GASKET AS	3611207000	C-LU1011	1	
D05	GASKET	3612325300	EPDM , WASH , D-LU1011	1	FOR WASH
D06	GASKET	3612325400	EPDM , DRY , C-LU1011	1	FOR DRY
D07	NOZZLE SHOWER	3618111200	PP	1	
D08	CLAMP GASKET BUSHING	3611206800	GI 1.2T	1	FOR DRY
D09	SPECIAL SCREW	3616029810	SWCH 6.5X45	4	
D10	DUCT B AS	3610DUTL00	C-L E	1	FOR DRY
D11	HOSE DRAIN *I	3613275200	EPDM D-LU1011	1	
D12	CLAMP AS	3611203210	ID=61, WIRE+GUIDE+BOLT, GS	1	
D13	CLAMP HOSE	3611204700	D26	1	
D14	CLAMP HOSE	3611201401	HSW3,YW,D2.6,ID36,W44.5	1	
D15	AIR TRAP	361A500101	PP	1	
D16	HOSE AIR(PRESSURE)	3613266930	ID=4,OD=8, L=680MM(L-SERIES)	1	
D17	DAMPER FRICTION	361A700110	70N AKS ST=170-260 DL=197.5 LOW NOISE	2	
D18	DAMPER PIN	361A700200	AKS D=14.5	2	
D19	TUB FRONT	3618830000	FRPP, C-LU1011	1	
D20	SPRING SUSPENSION	3615116800	KGF	2	
D21	SPECIAL SCREW	3616029800	SWCH 6.5X30	14	
D22	SPECIAL SCREW	3616029500	SUS430 8*25	3	
D23	LIFTER WASH	361A401300	PP,1PIECE,TWIST	3	
D24	SCREW TAPPING	7122401408	T2S TRS 4X14 SUS,STS	3	
D25	DRUM AS	3617012500	D-LU1011	1	
D26	SPIDER AS	361A301200	D-LU1011	1	
D27	WATER SEAL	361A600100	NBR	1	
D28	SEALING TUB	3612321601	EPDM L1600(-0~ +10)	1	
D29	FIXTURE HEATER	3612006700	SUS	1	
D30	BEARING INNER	3616303100	6206Z	1	
D31	DAMPER FRICTION	361A700130	60N AKS ST=170-260 DL=197.5 LOW NOISE	2	
D32	DAMPER PIN	361A700200	AKS D=14.5	2	
D33	TUB REAR AS	36100T1400	D-LU1011	1	
D34	BALANCER WEIGHT T	3616110400	PP, C-LU1011, 2.48KG	1	FOR DRY
D35	BALANCER WEIGHT T(WASH)	3616110700	PP, D-LU1011, 2.48KG	1	FOR WASH
D36	SPECIAL SCREW	3616029400	SWCH 8.5X30	2	
D37	CLAMP HOSE	3611204700	D26	1	
D38	SPECIAL SCREW	3616007400	T2S TRS 4X10+24	2	OPTION
D39	UNIT BUBBLE GENERATOR	36189L4177	HIGH,PAD B,BL/WH,320,RP4,GUIDE O,SPONGE 200	1	OPTION
D40	HOSE VENT	3613267100	EPDM	1	
D41	BEARING OUTER	3616303200	6205Z	1	
D42	HEATER WASH	3612803700	230V 2000W.1R5A721002.IRCA FUSE 2EA	1	
D43	PIPE DUCT AS	3614414001	C-L PIPE DUCT+HOSE+CLAMP	1	
D44	UNIT STATOR BLDC	36189L6200	AL,30T(28T),NMT	1	
D45	SPECIAL BOLT AS	3616029900	SWCH M8 + SILOCK	6	
D46	UNIT ROTOR BLDC	36189L6300	L'SERIES, NMT	1	
D47	SPECIAL BOLT AS	3616029620	SWCH 10*30 S/W P/W NON-SEAL LOCK	1	

8. DUCT B (for dry model)

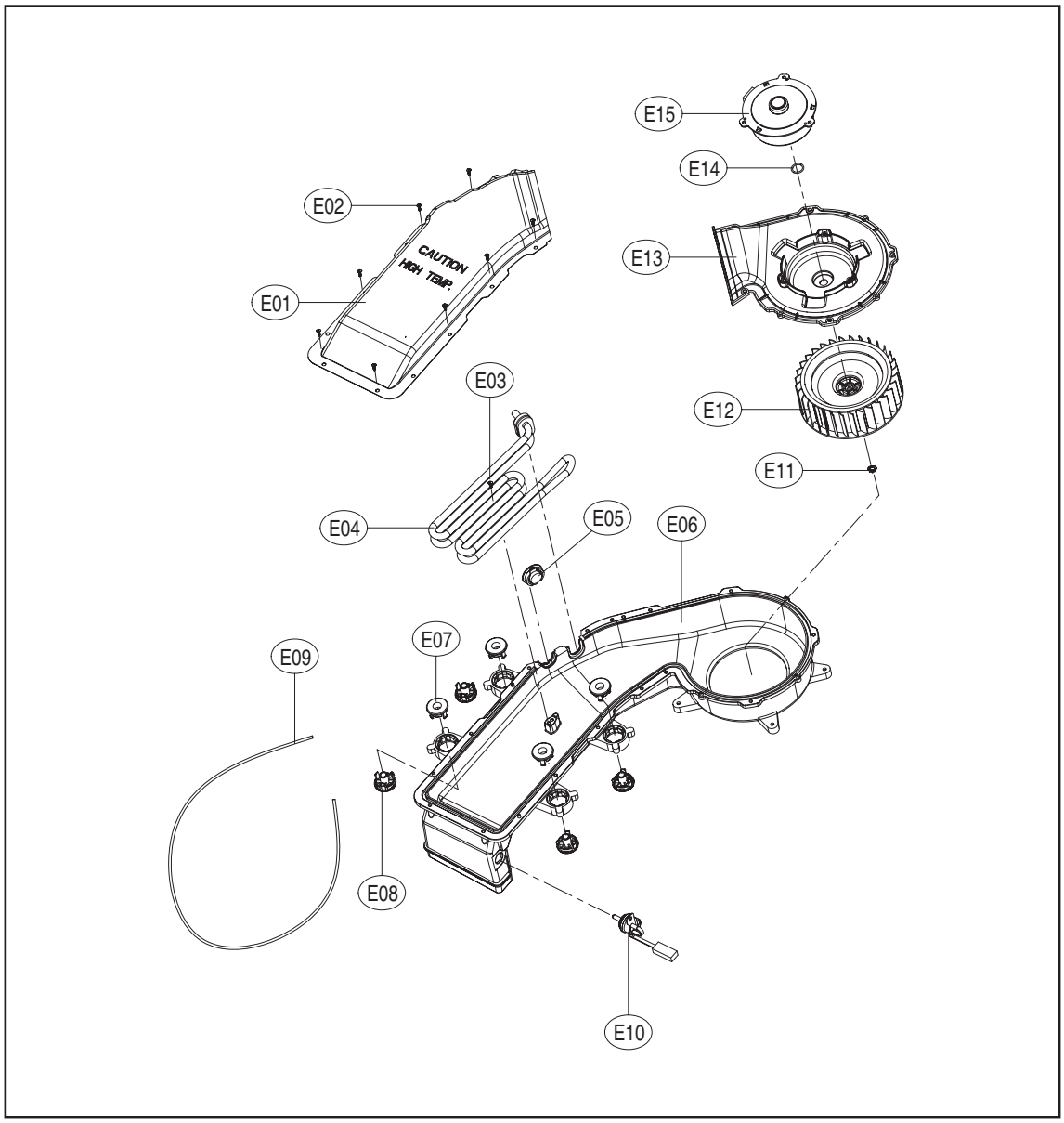

No.	PARTS NAME	CODE	SPECIFICATIONS	Q'TY	REMARK
E01	DUCT B UPPER	361A202400	ALCOSTA	1	
E02	SCREW TAPPING	7122401411	T2S TRS 4X14 MFZN	8	
E03	SCREW TAPPING	7112401208	T1 TRS 4X12 SUS	1	
E04	HEATER DRY	3612801400	230V 2.1KW 25.19OHM 6.1W/SQ INCOLOY800 1R1A034002	1	
E05	PACKING THERMOSTAT	3614009900	SILICON, DWD-100DR	1	
E05	SWITCH THERMOSTAT	3619046500	ON120°C OFF150°C 230V 15A VDE	1	
E06	DUCT B LOWER	361A202500	ALDC C-LU1011	1	
E07	BUSHING UPPER	3610703800	POM C-LU1011	4	
E08	BUSHING LOWER	3610703900	POM C-LU1011	4	
E09	GASKET SEAL A	3612325700	EPDM FOAM, D=5, L=1293	1	
E10	PACKING RUBBER	3614009800	SILICON, DWD-100DR	1	
E10	THERMISTOR DRY	361AAAAD00	C-LD/LU,L=200,R40=26.065K,R90=4.4278K	1	
E11	NUT HEX	3616032100	M6*1.0P,CCW	1	
E12	FAN AS	3611886400	GFPP30% , C-LU1011	1	
E13	COVER DUCT	3611431400	GFPP30% C-LU1011	1	
E14	RING O	3614603400	DWD-100DR,NBR,ID=7.6,OD=13.6	1	
E15	UNIT FAN MOTOR	36189M2Q00	24V DC 14W	1	

9. CABINET AS

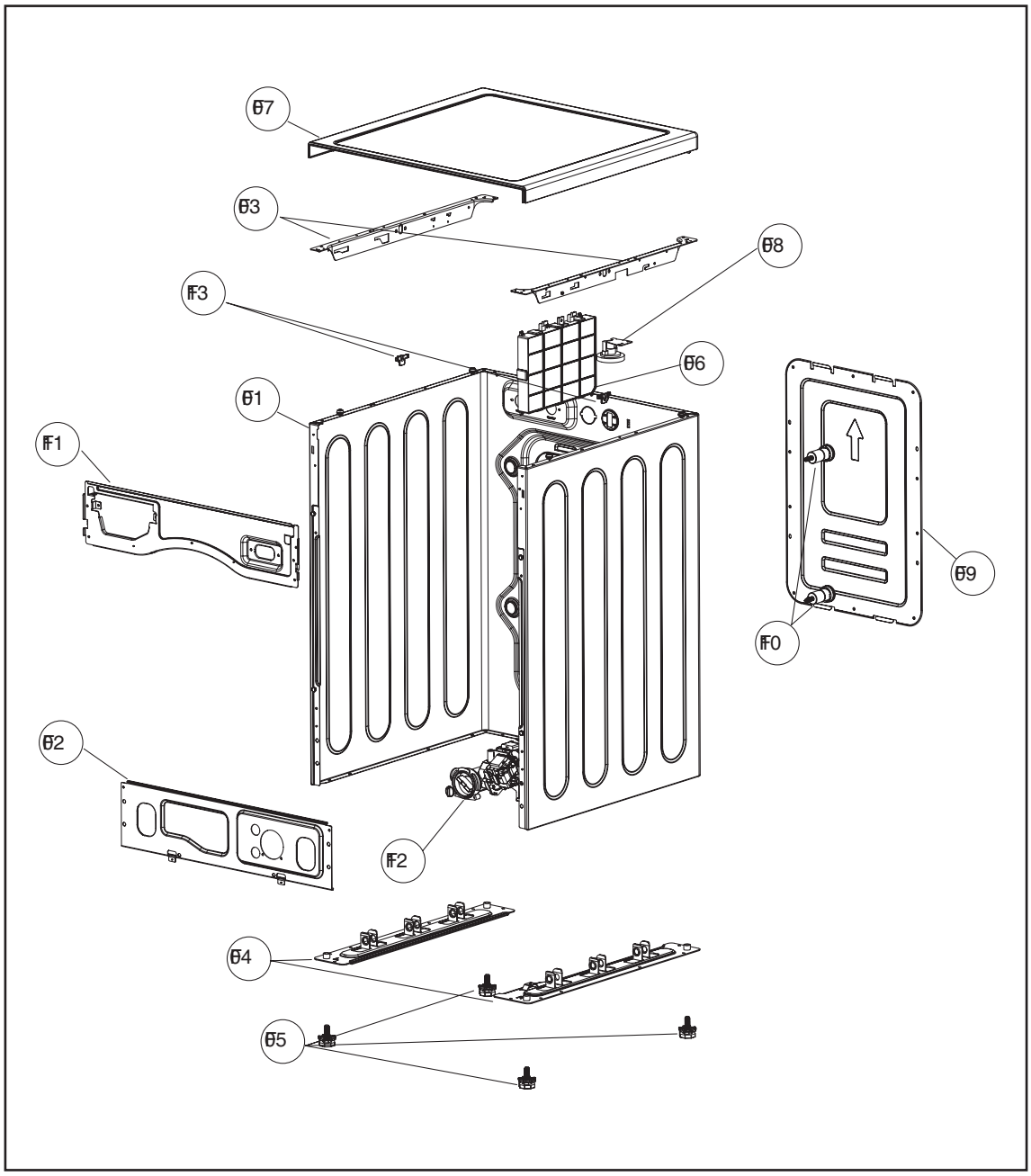

No.	PARTS NAME	CODE	SPECIFICATIONS	Q'TY	REMARK
F01	CABINET	3610813300	SGCC 0.8T,L'S	1	
F02	FRAME LOWER	36122UD700	SGCC 1.2T	1	
F03	FRAME TOP *L	36122UDA00	SGCC 1.6T	1	
	FRAME TOP *R	36122UDB00	SGCC 1.6T	1	
F04	BASE U L	3610393800	SGCC T2.0	1	
	BASE U R	3610393900	SGCC T2.0	1	
F05	LEG ADJUST AS	3617703811	CHINA PARTS, DWD-900W	4	
F06	MAIN PCB AS	3610PCBL00	D-LU EFA WASH UNI ZERO REA CC C BB NST	1	
	MAIN PCB AS	3610PCBL02	C-LU1013MFA	1	
	MAIN PCB AS	3610PCBL50	C-LD1412EFA02	1	
	MAIN PCB AS	3610PCBL51	C-LDEFA02 DRY DD ZERO C CC BB ST1	1	
	MAIN PCB AS	3610PCBL54	C-LD1213NHS	1	
	MAIN PCB AS	3610PCBL55	C-LD1213LHS02	1	
	MAIN PCB AS	361MPCLD00	C-LD 1W F REA CC C BB NST	1	
	MAIN PCB AS	361MPCLD01	C-LD 1W F REA CC C BB ST	1	
	MAIN PCB AS	361MPCLD02	C-LD 1W F REA NCC H NBB NST	1	
	MAIN PCB AS	361MPCLD03	C-LD 1W F REA CC H BB ST	1	
	MAIN PCB AS	361MPCLD04	C-LD 1W F REA NCC C BB NST	1	
	MAIN PCB AS	361MPCLD06	C-LD EC F REA CC C BB ST	1	
	MAIN PCB AS	361MPCLD07	C-LD EC NF REA NCC H NBB NST	1	
	MAIN PCB AS	361MPCLD08	C-LD EC NF REA NCC H NBB ST	1	
	MAIN PCB AS	361MPCLD09	C-LD EC REA NCC C BB NST	1	
	MAIN PCB AS	361MPCLD10	C-LD 1W REA NCC C NBB NST	1	
	MAIN PCB AS	361MPCLD50	C-LD EC NF REA CC C BB ST	1	
	MAIN PCB AS	361MPCLD51	C-LD EC NF REA CC C BB NST	1	
	MAIN PCB AS	361MPCLD52	C-LD EC NF REA NCC H NBB NST	1	
	MAIN PCB AS	361MPCLD53	C-LD EC NF REA CC H BB ST	1	
	MAIN PCB AS	361MPCLD54	C-LD EC F REA CC H BB ST	1	
	MAIN PCB AS	361MPCLU00	C-LU 1W REA CC C BB ST	1	
	MAIN PCB AS	361MPCLU01	C-LU EC NF NR CC C BB NST	1	
	MAIN PCB AS	361MPCLU02	C-LU ZERO REA CC H BB ST	1	
	MAIN PCB AS	361MPCLU50	C-LU EC NF NREA CC C BB NST	1	
	MAIN PCB AS	361MPCLU51	C-LU EC NF NREA CC C BB ST	1	
	MAIN PCB AS	361MPDLD00	D-LD 1W F REA CC C BB NST	1	

No.	PARTS NAME	CODE	SPECIFICATIONS	Q'TY	REMARK
F06	MAIN PCB AS	361MPDLD01	D-LD 1W F REA CC C BB ST	1	
	MAIN PCB AS	361MPDLD02	D-LD 1W F REA CC H BB ST	1	
	MAIN PCB AS	361MPDLD03	D-LD 1W F REA NCC H NBB NST	1	
	MAIN PCB AS	361MPDLD04	D-LD 1W F REA CC C NOBB NST	1	
	MAIN PCB AS	361MPDLD05	D-LD 1W F REA CC C NOBB ST	1	
	MAIN PCB AS	361MPDLD50	D-LD EC NF C BB REA NF NS CC	1	
	MAIN PCB AS	361MPDLD51	D-LD EC F C NCC REA BB NST	1	
	MAIN PCB AS	361MPDLD52	D-LD EC NF R CC C BB ST	1	
	MAIN PCB AS	361MPDLD53	D-LD EC NF H BB REA ST CC	1	
	MAIN PCB AS	361MPDLD54	D-LD EC F R NCC C BB ST	1	
	MAIN PCB AS	361MPDLD55	D-LD EC F H BB REA ST CC	1	
	MAIN PCB AS	361MPDLD56	D-LD EC NF R CC C NBB ST	1	
	MAIN PCB AS	361MPDLU00	D-LU 1W F REA CC C BB NST	1	
	MAIN PCB AS	361MPDLU01	D-LU EC NF NR CC C BB NST	1	
	MAIN PCB AS	361MPDLU02	D-LU 1W F REA CC H BB NST	1	
	MAIN PCB AS	361MPDLU03	D-LU 1W F REA CC C NBB NST	1	
	MAIN PCB AS	361MPDLU04	D-LU EC NF NR NCC C BB NST	1	
	MAIN PCB AS	361MPDLU50	D-LU EC NF NR CC C NBB NST	1	
F07	PLATE *T	3614541100	SECC 1.2T, C-LU1011	1	
F08	SENSOR PRESSURE	3614825240	DL-DW13 AIR INLET 315	1	
F09	COVER *B	3611431600	0.4T SGCC, C-LU1011	1	
F10	FIXTURE TUB AS	3612007421	6KG, CHINA, SAMWOO	4	
F11	FRAME UPPER	36122UD900	SGCC 1.2T	1	
F12	UNIT DRAIN PUMP AS	36189M2T00	AC220~240V/50HZ HANYU,AL,30W,DUAL PUMP,FILTER NEW	1	
F13	STOPPER SPRING	3615202200	POM, DWD-100DR	2	