EXPLODED VIEW

FREEZER DOOR PART: GR-P247, GR-P207, GR-L247, GR-L207

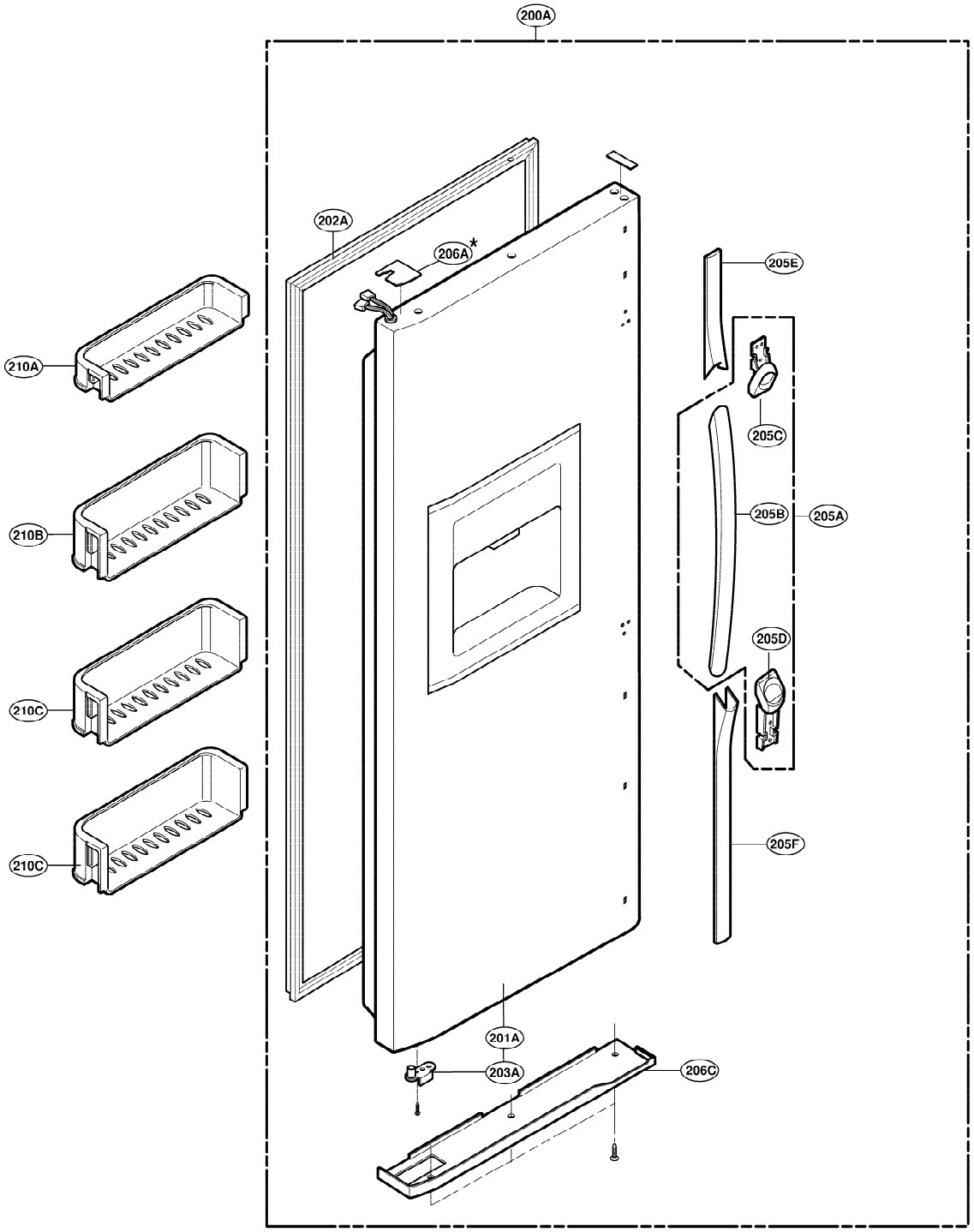

EXPLODED VIEW

Ref No. : GR-L247, GR-L207, GR-B247, GR-B207, GR-B197

REFRIGERATOR DOOR PART

*** : Optional part**

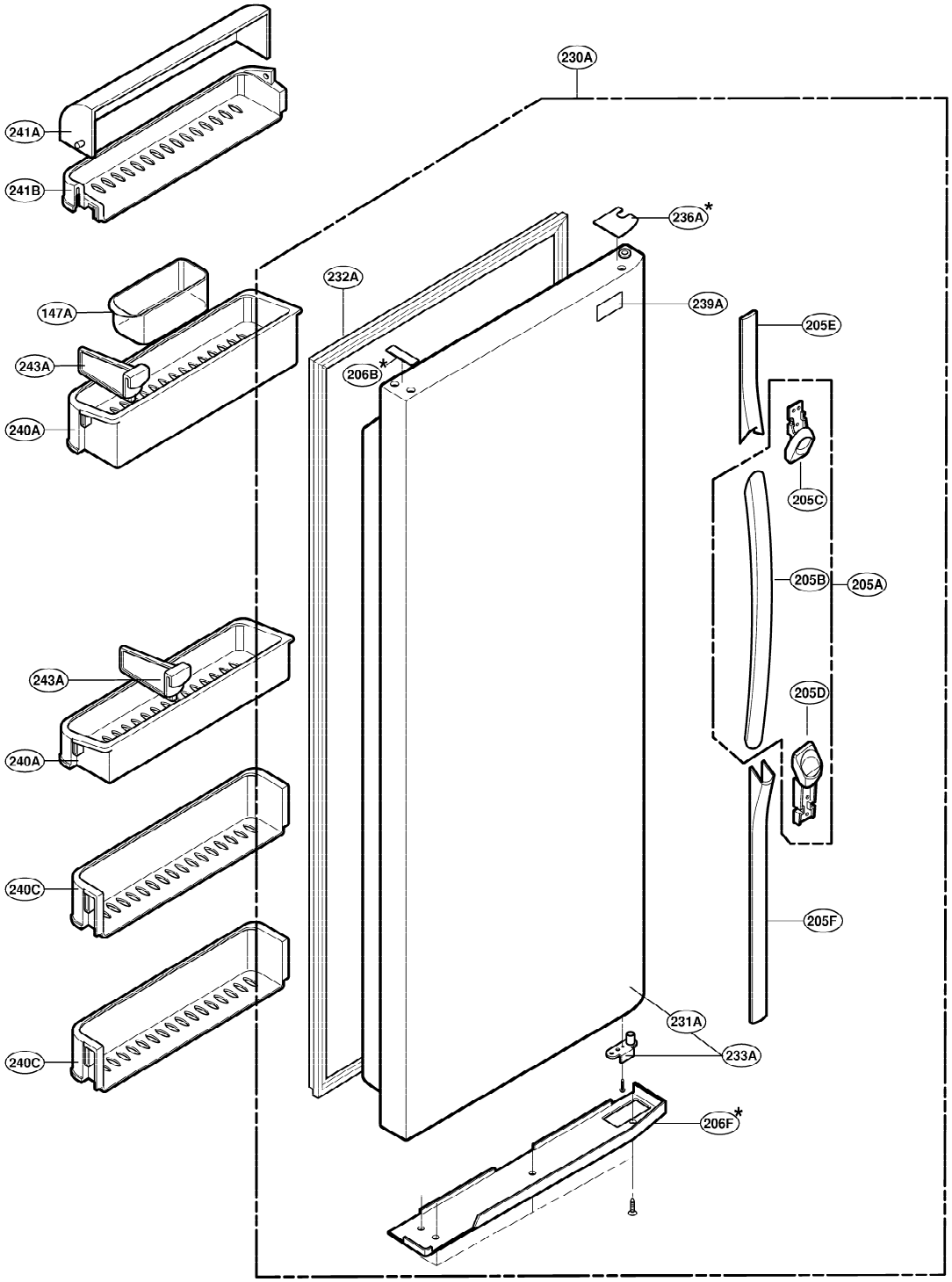

EXPLODED VIEW

FREEZER COMPARTMENT

*** : Optional part**

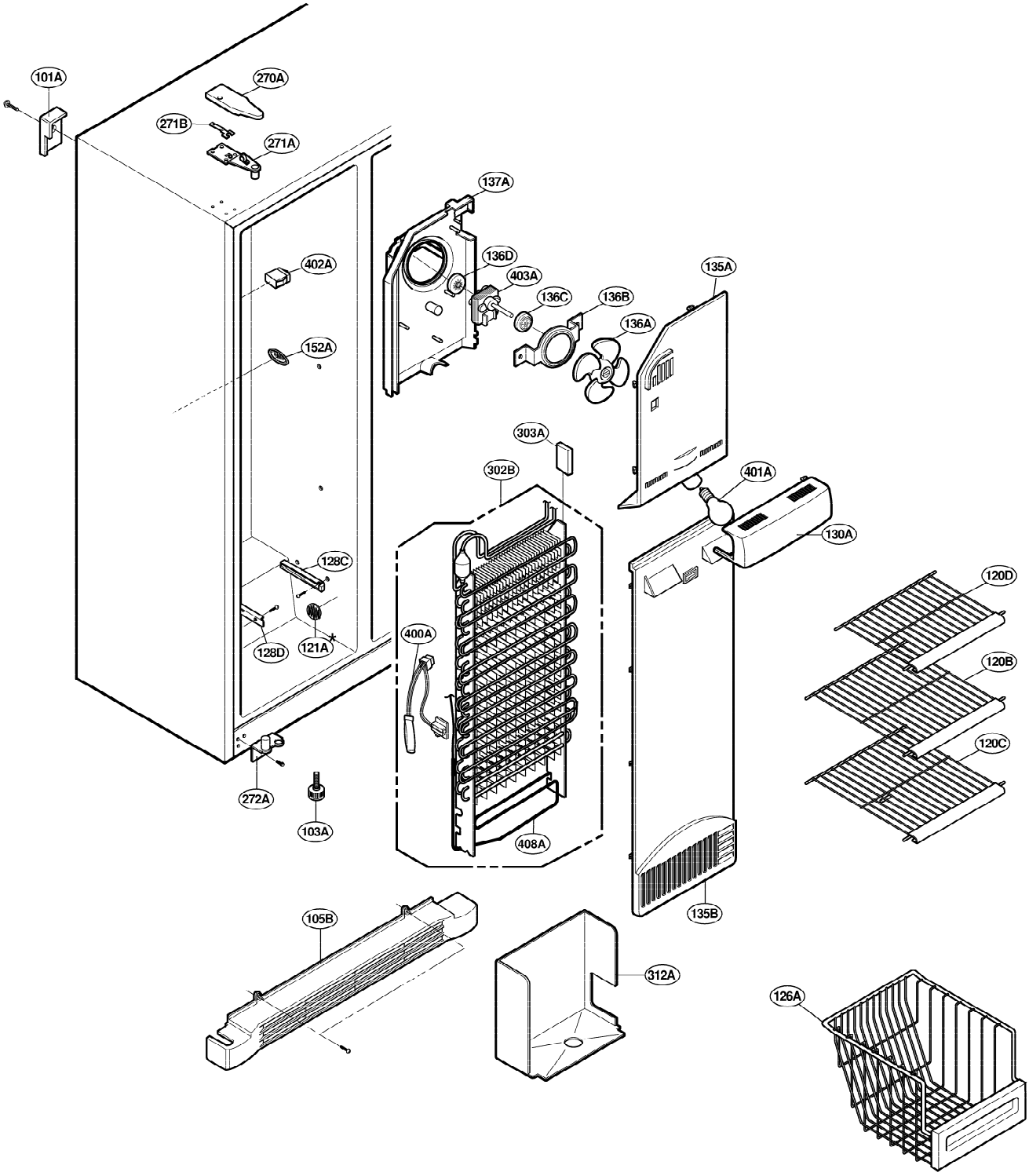

EXPLODED VIEW

REFRIGERATOR COMPARTMENT

* : Optional part

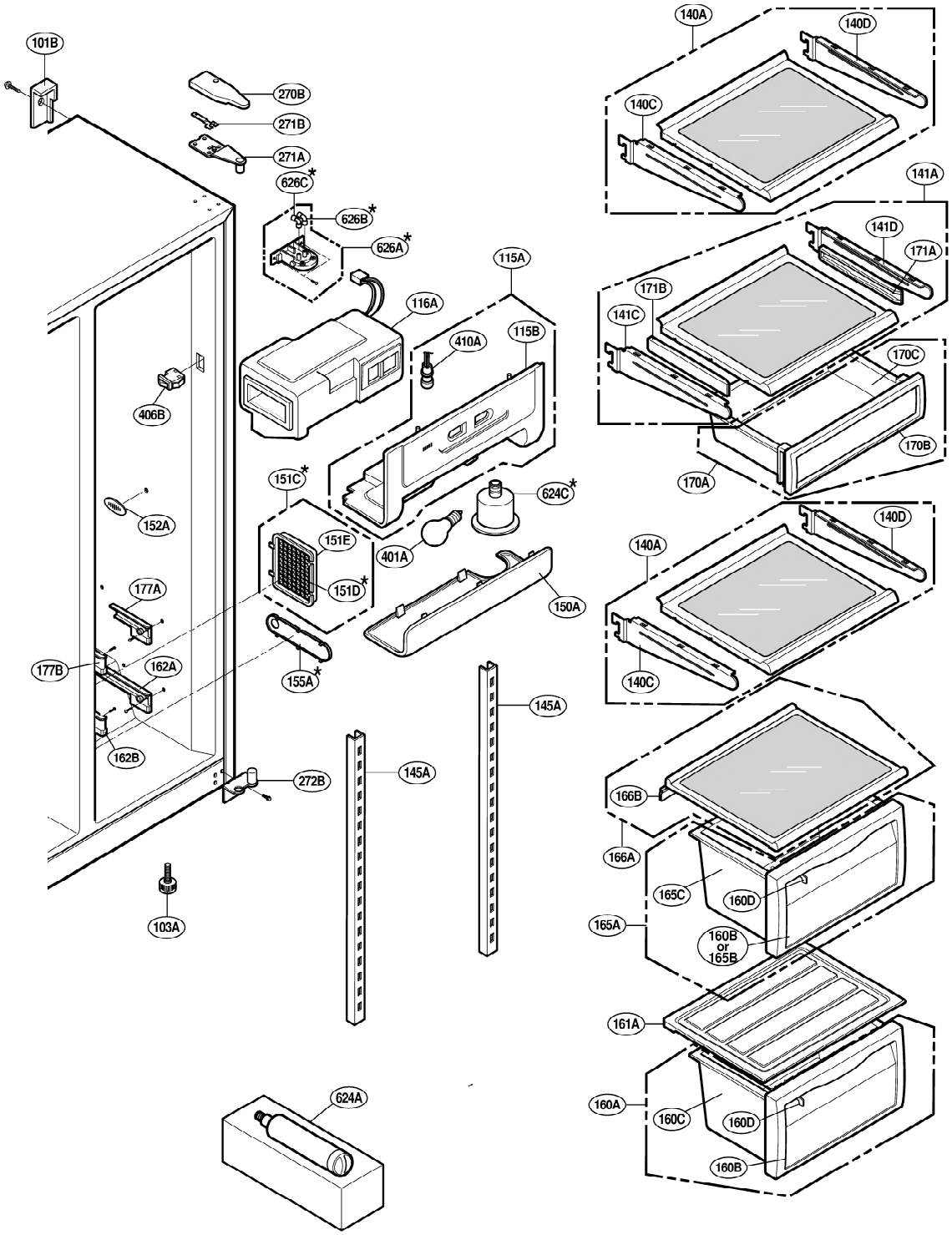

EXPLODED VIEW

ICE & WATER PART

* : Optional part

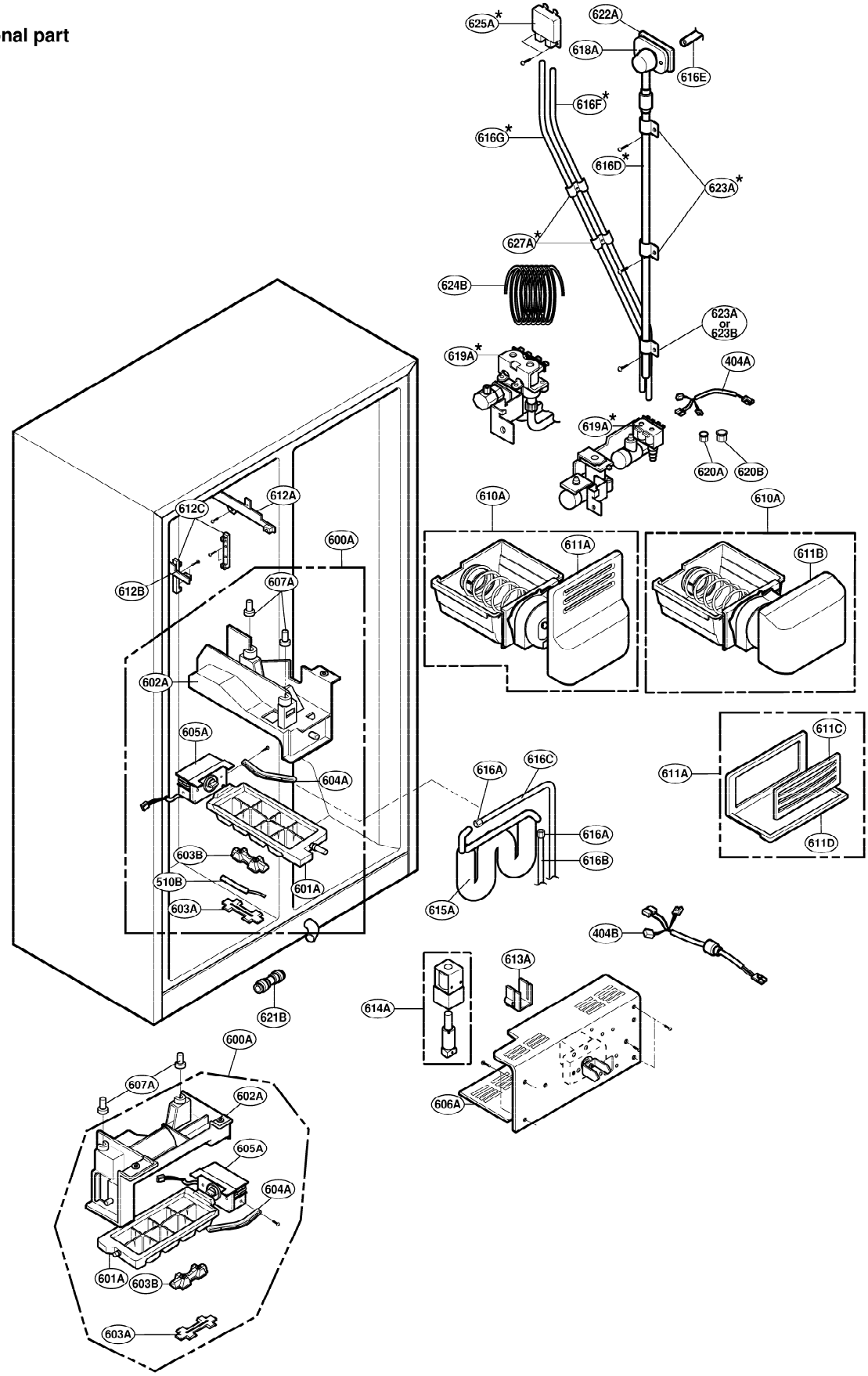

EXPLODED VIEW

MACHINE COMPARTMENT

*** : Optional part**

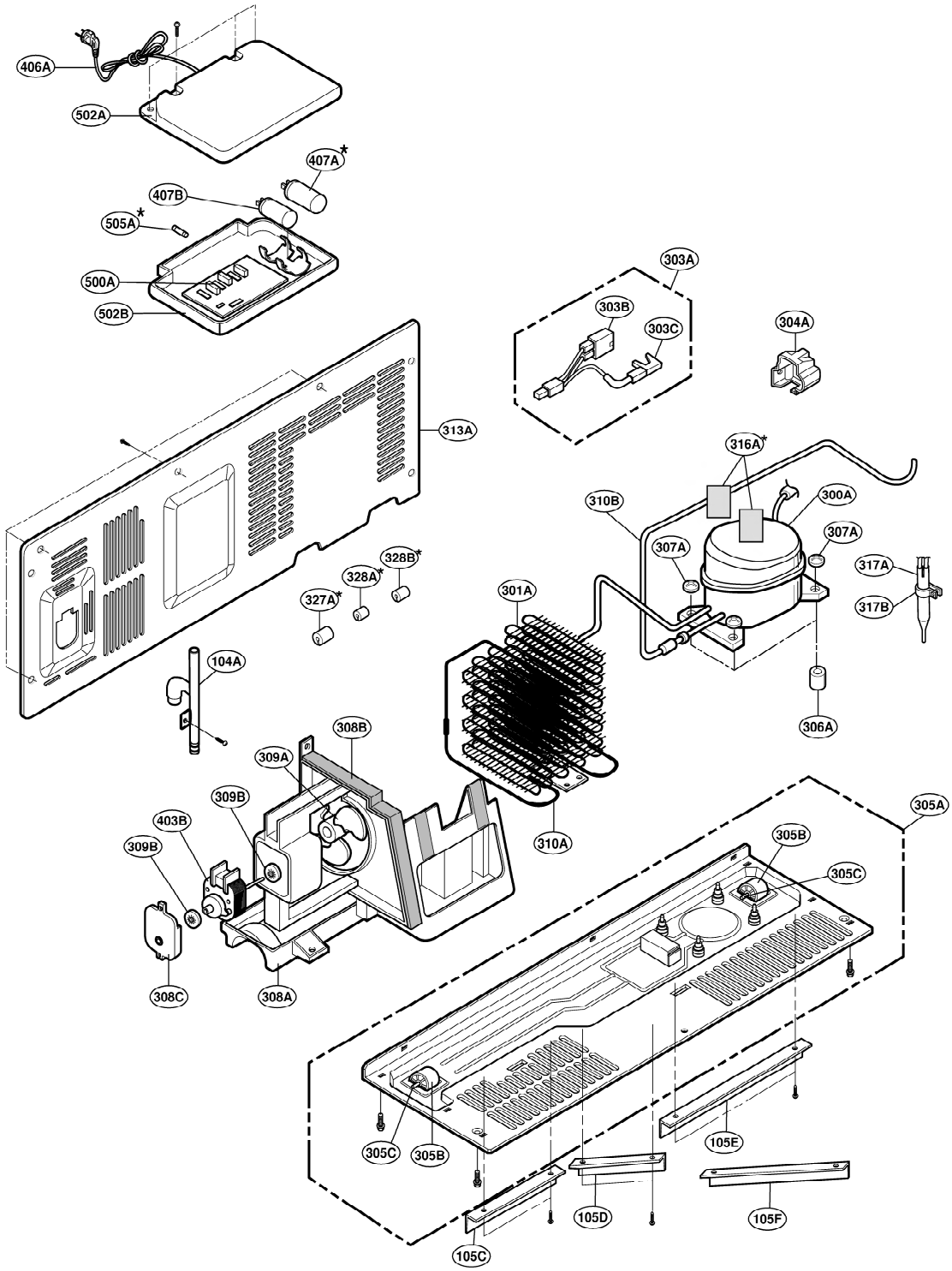

EXPLODED VIEW
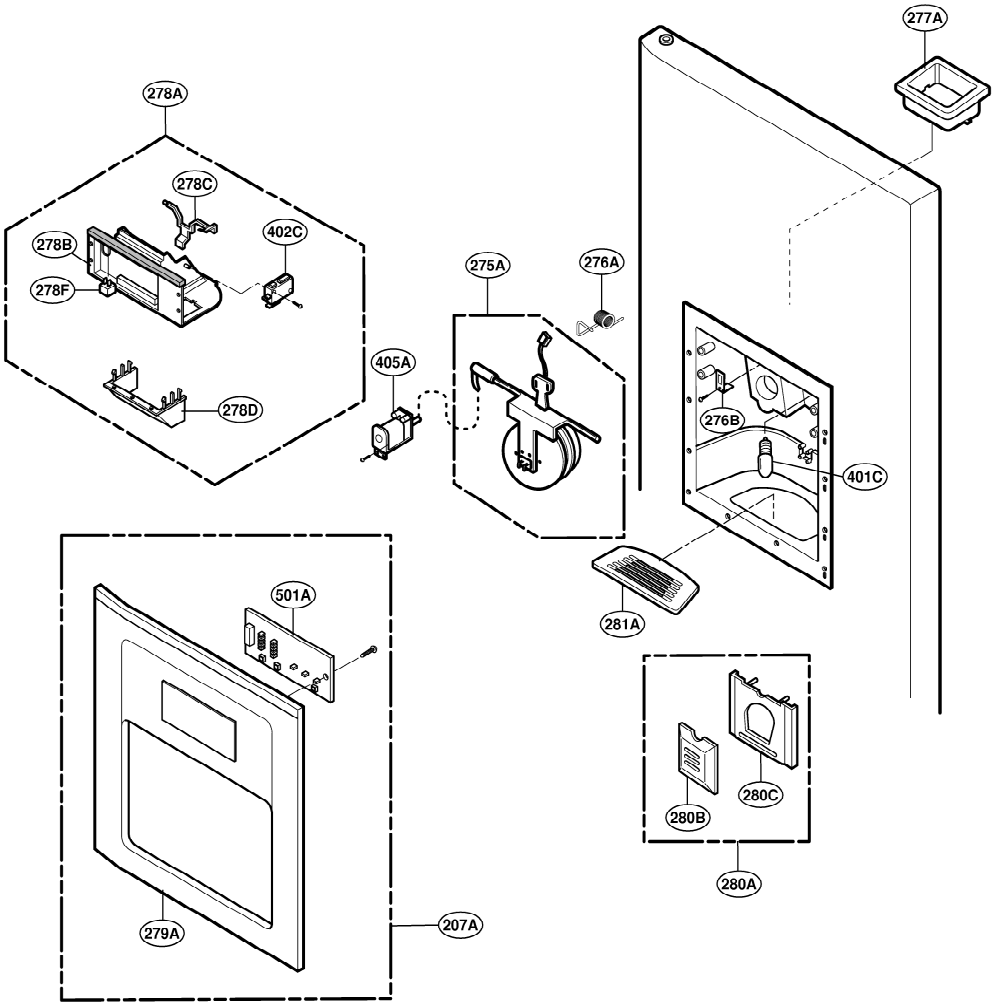
DISPENSER PART