8. EXPLODED VIEW & REPLACEMENT PARTS LIST

8-1.

▼ The parts of refrigerator and the shape of each part are subject to change in different localities.
▼ Capacitors and fuse are optional parts.

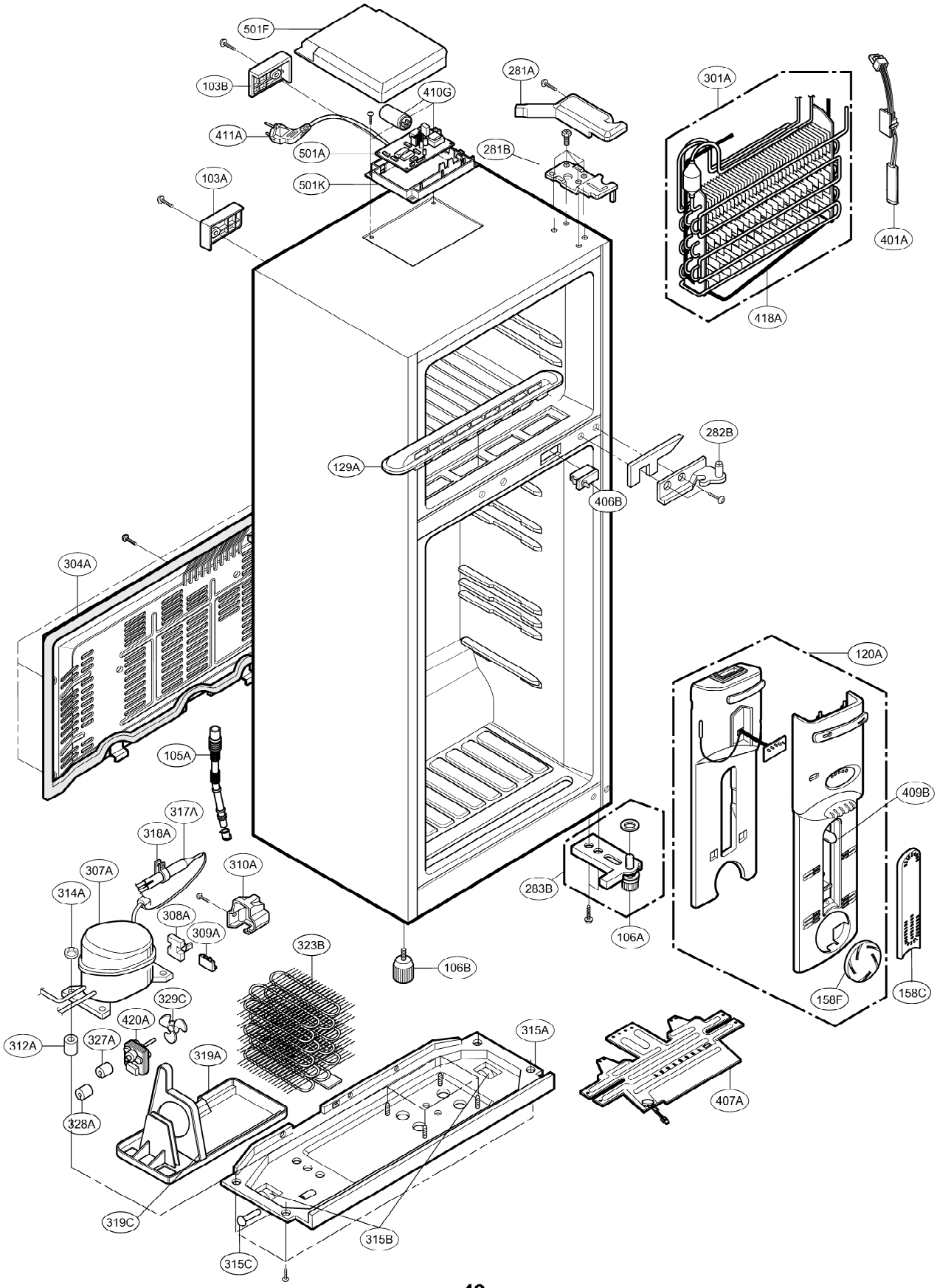

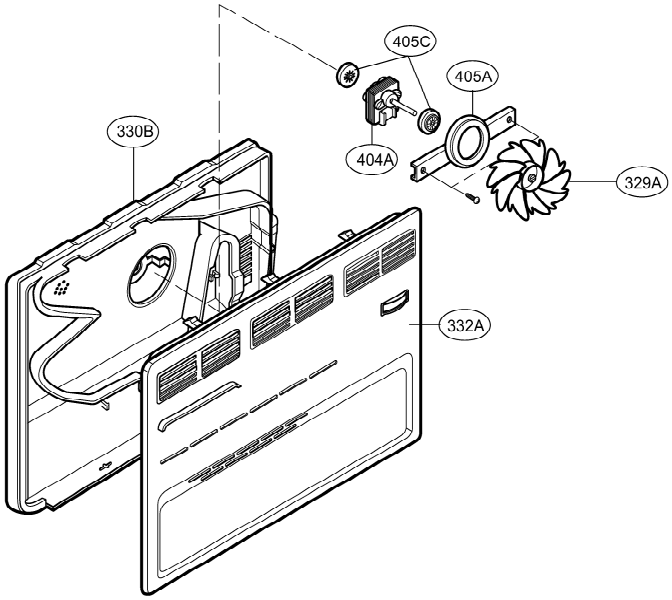
405C
405A
330B
404A
329A
332A

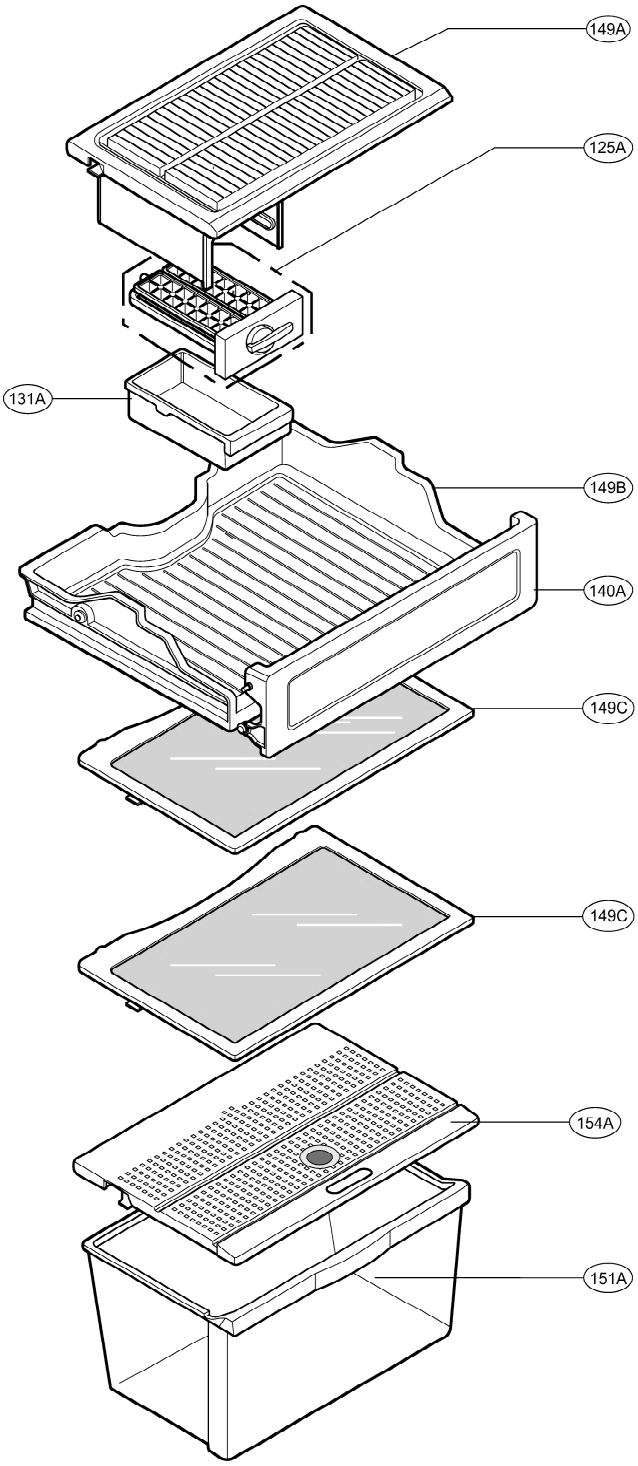
149A
125A
131A
149B
140A
149C
149C
154A
151A

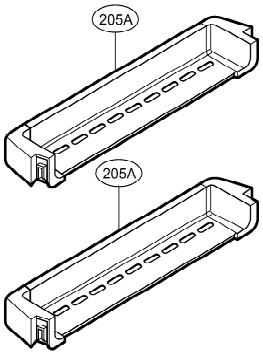
205A
205A

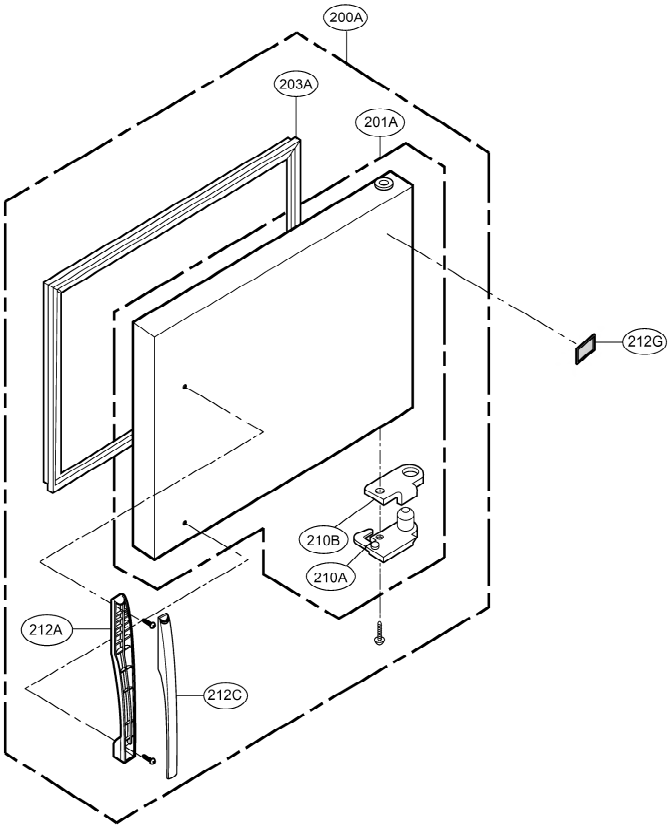
200A
203A
201A
212G
210B
210A
212A
212C

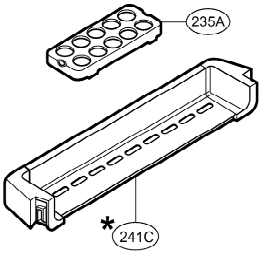
235A
*241C

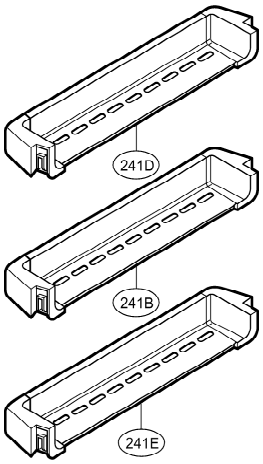
241D
241B
241E

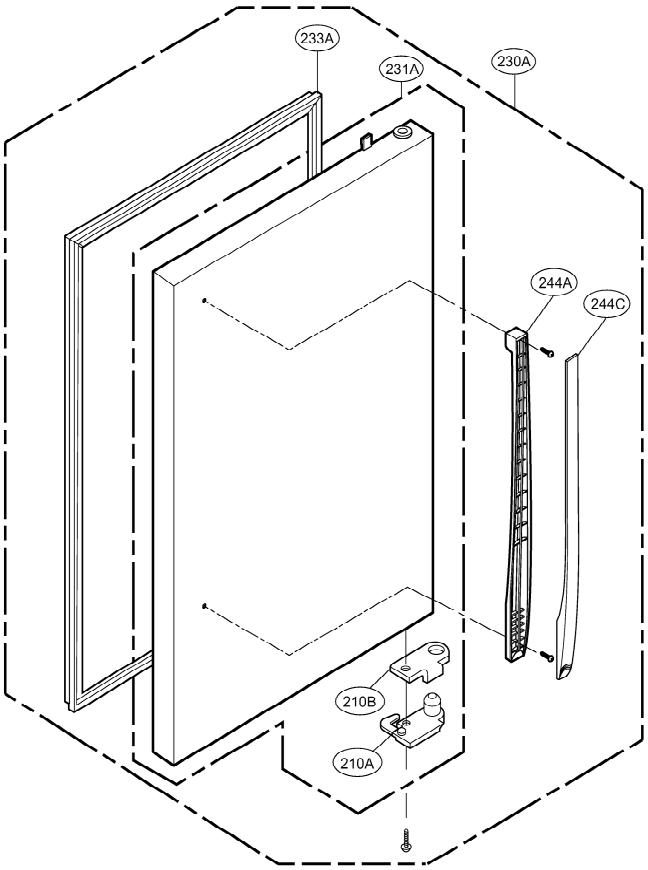
233A
231A
230A
244A
244C
210B
210A