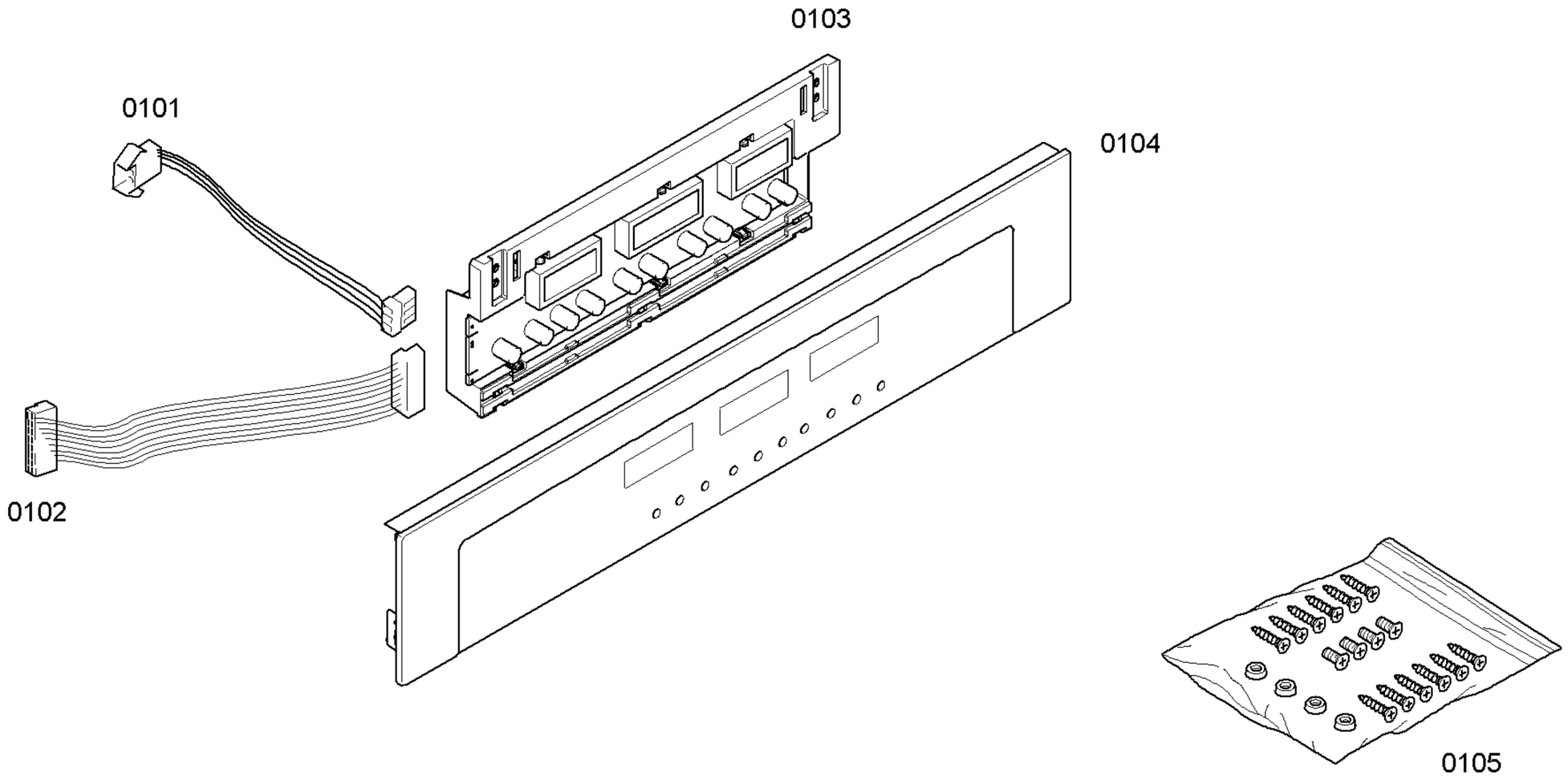

Copyright © (2009) by Bosch / ESHOP_7_2

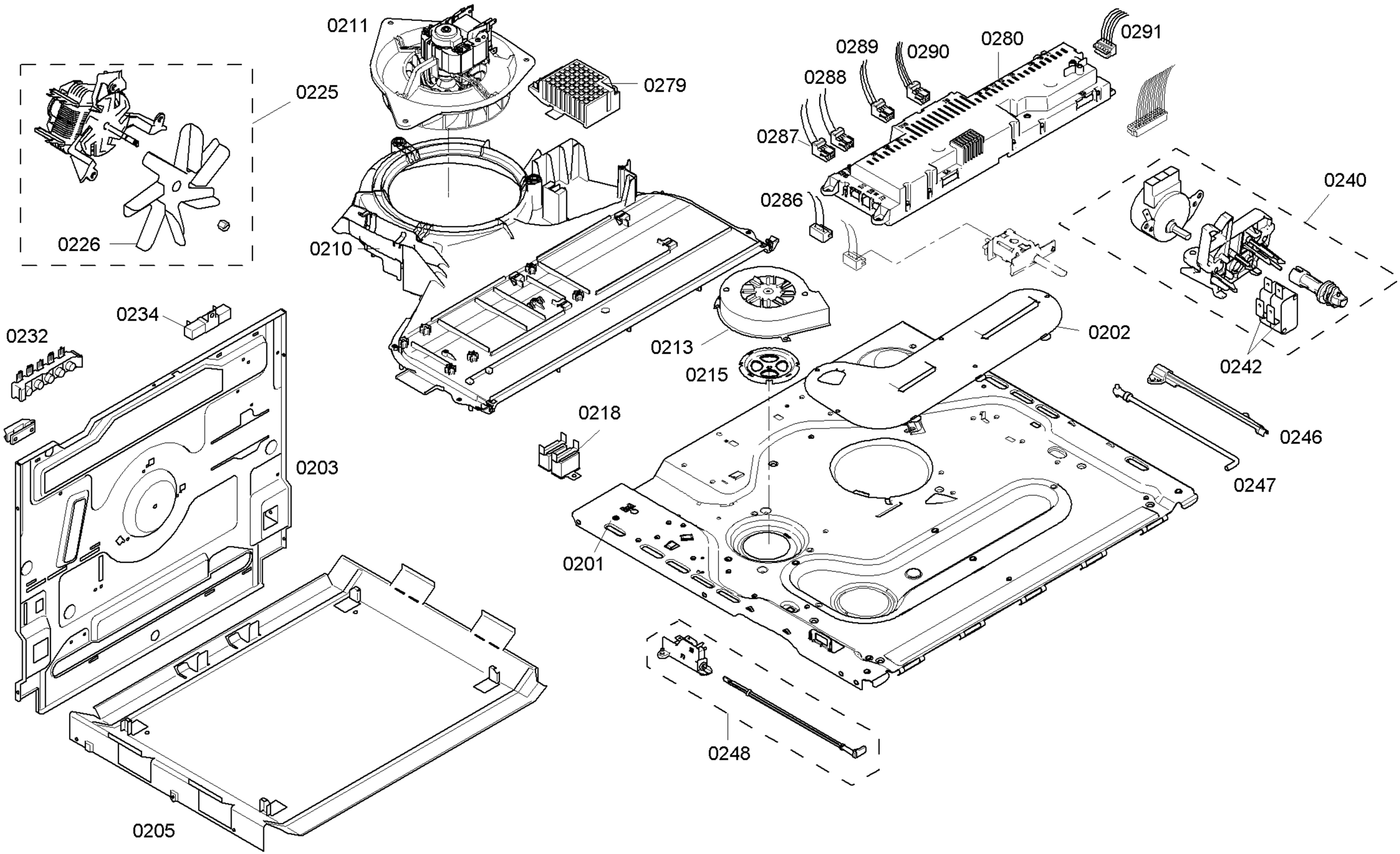

58300000123430 aet 000 b 2/6

Copyright © (2009) by Bosch / ESHOP_7_2

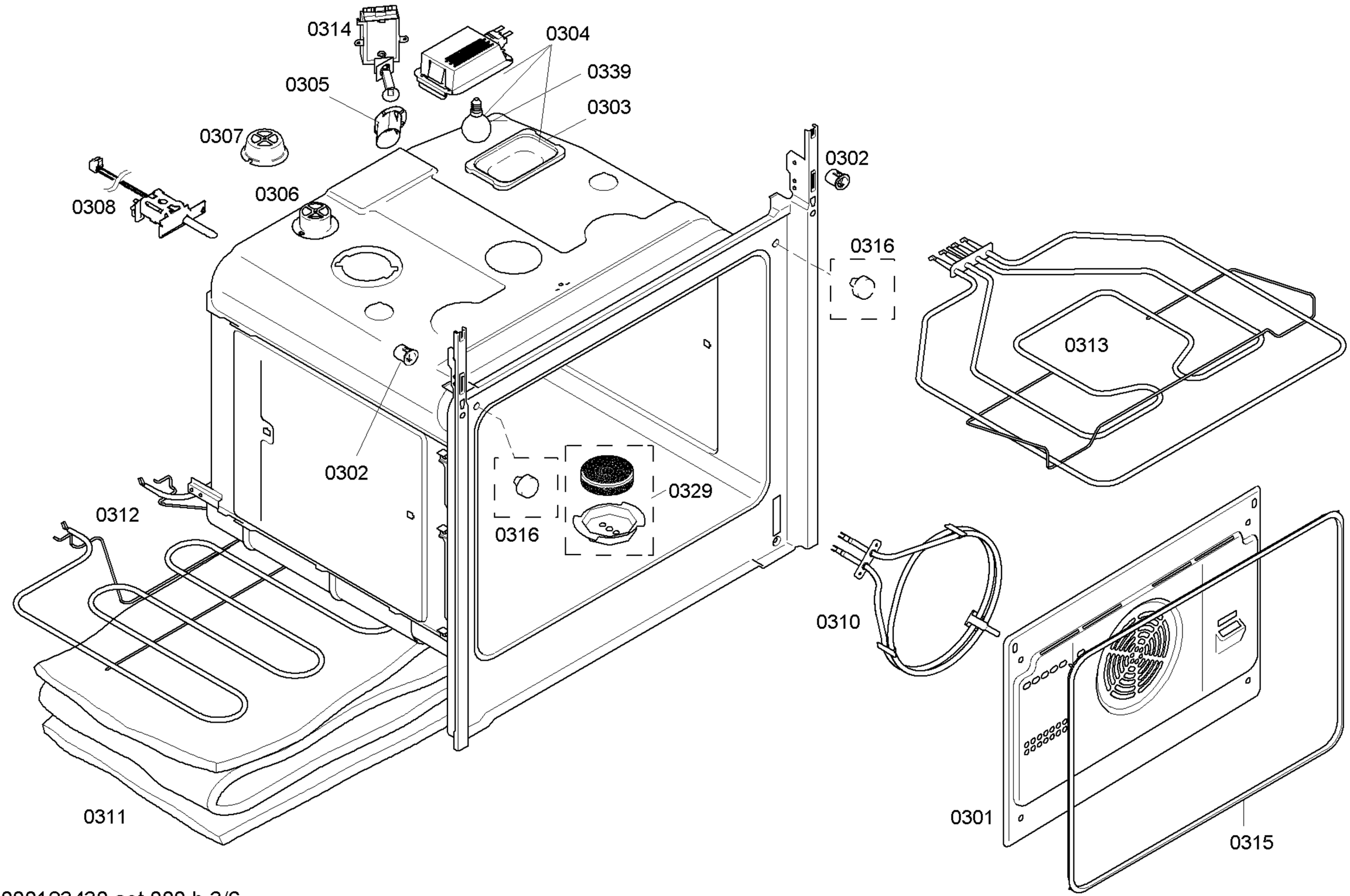

58300000123430 aet 000 b 3/6

Copyright © (2009) by Bosch / ESHOP_7_2

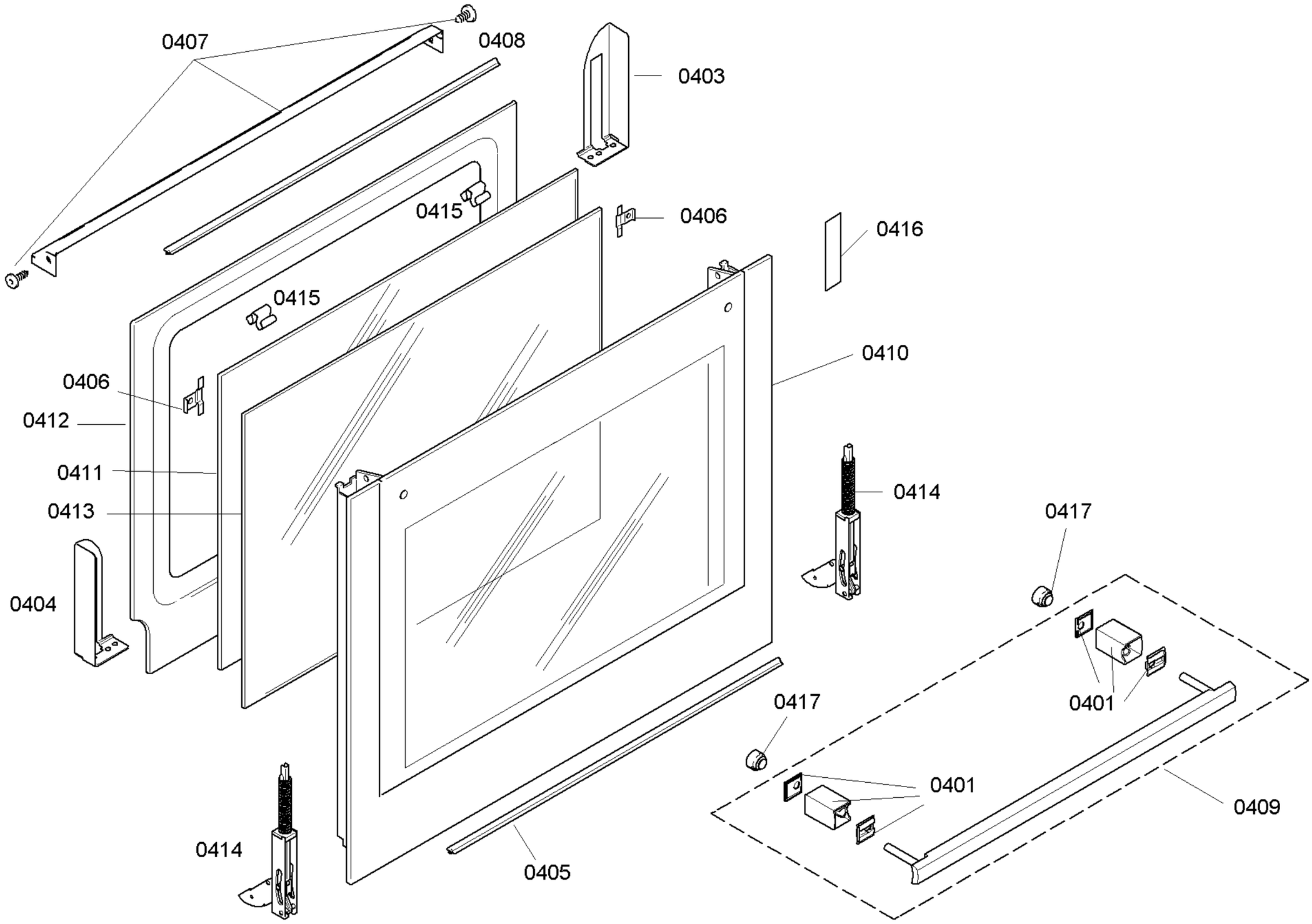

Copyright © (2009) by Bosch / ESHOP_7_2

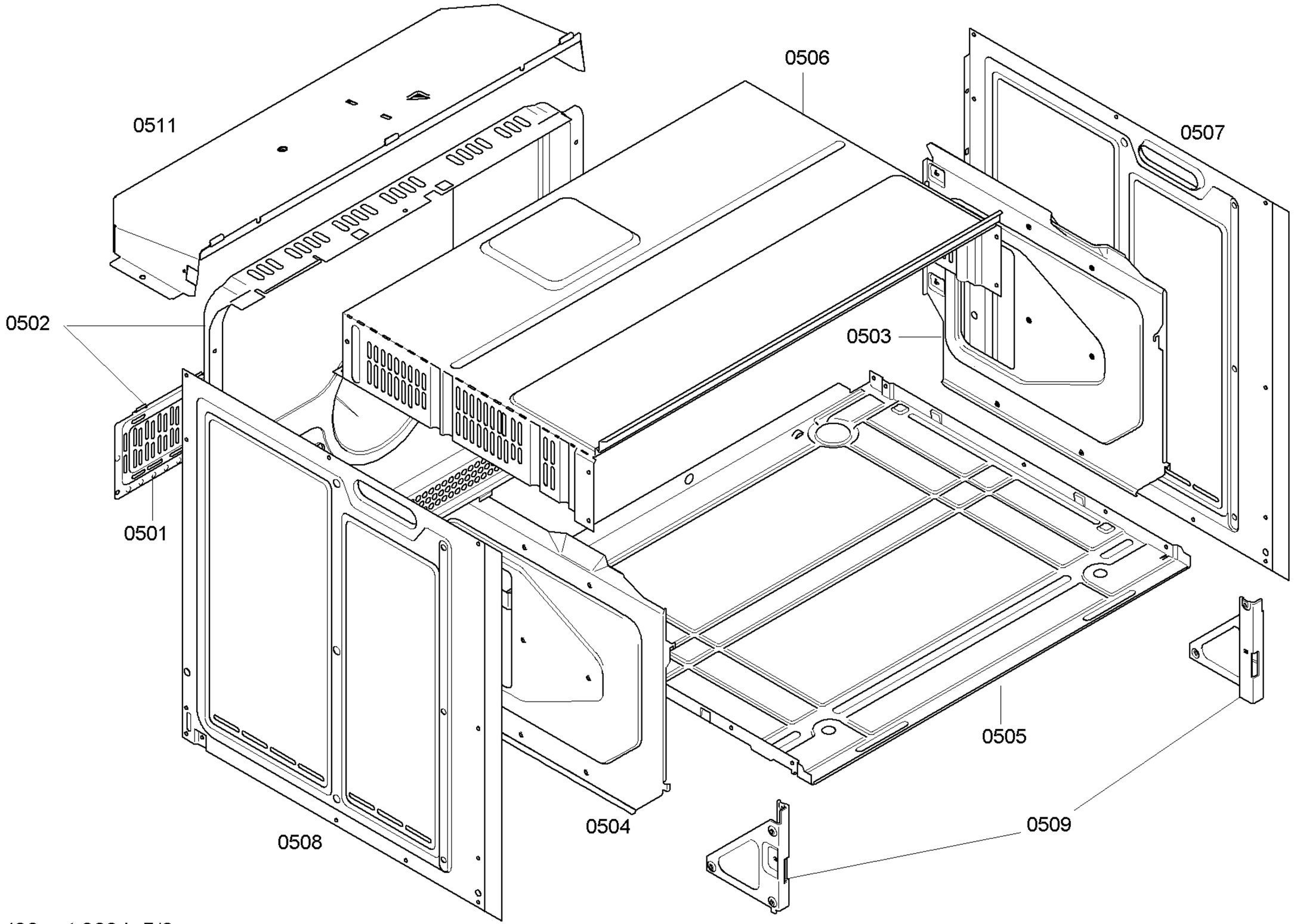

58300000123430 aet 000 b 5/6

Copyright © (2009) by Bosch / ESHOP_7_2

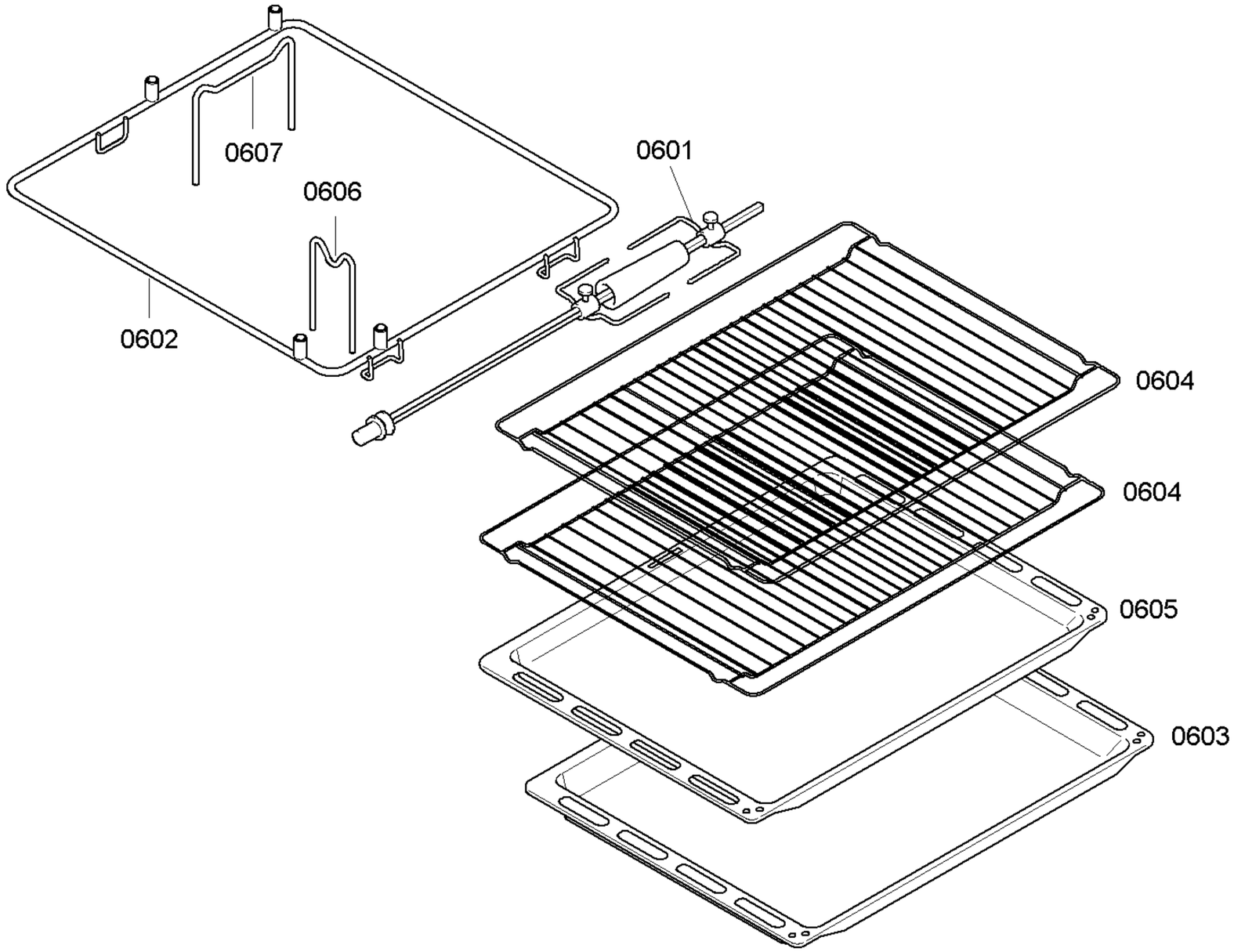

Copyright © (2009) by Bosch / ESHOP_7_2