Exploded View

Edition:2007/01

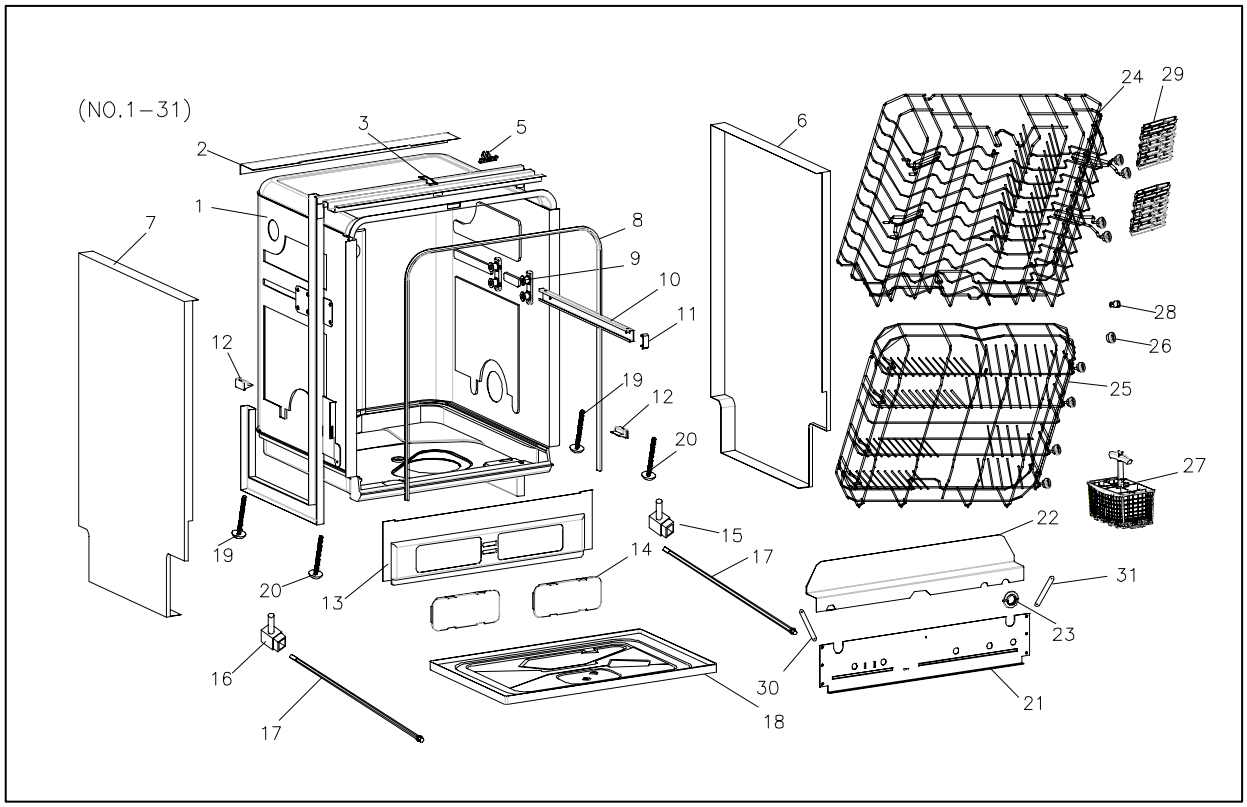

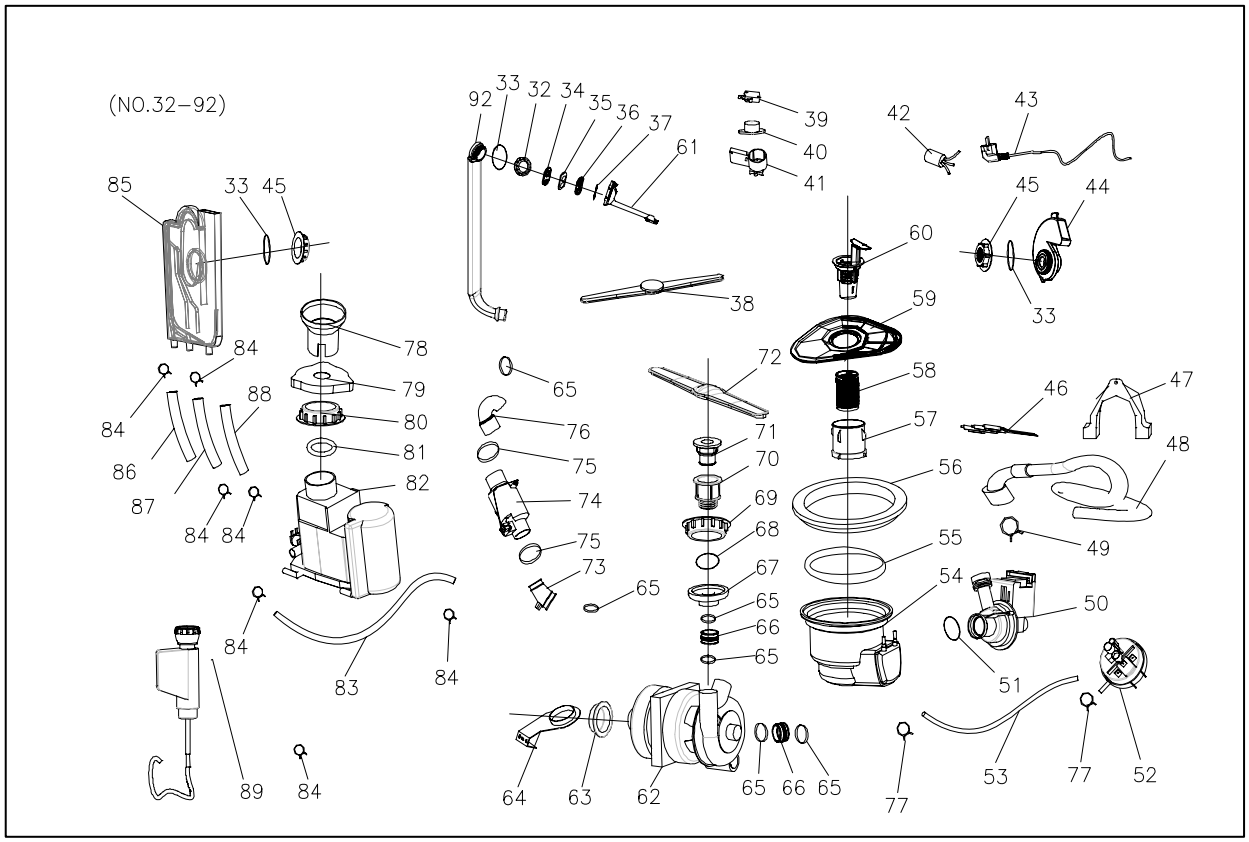

Exploded View
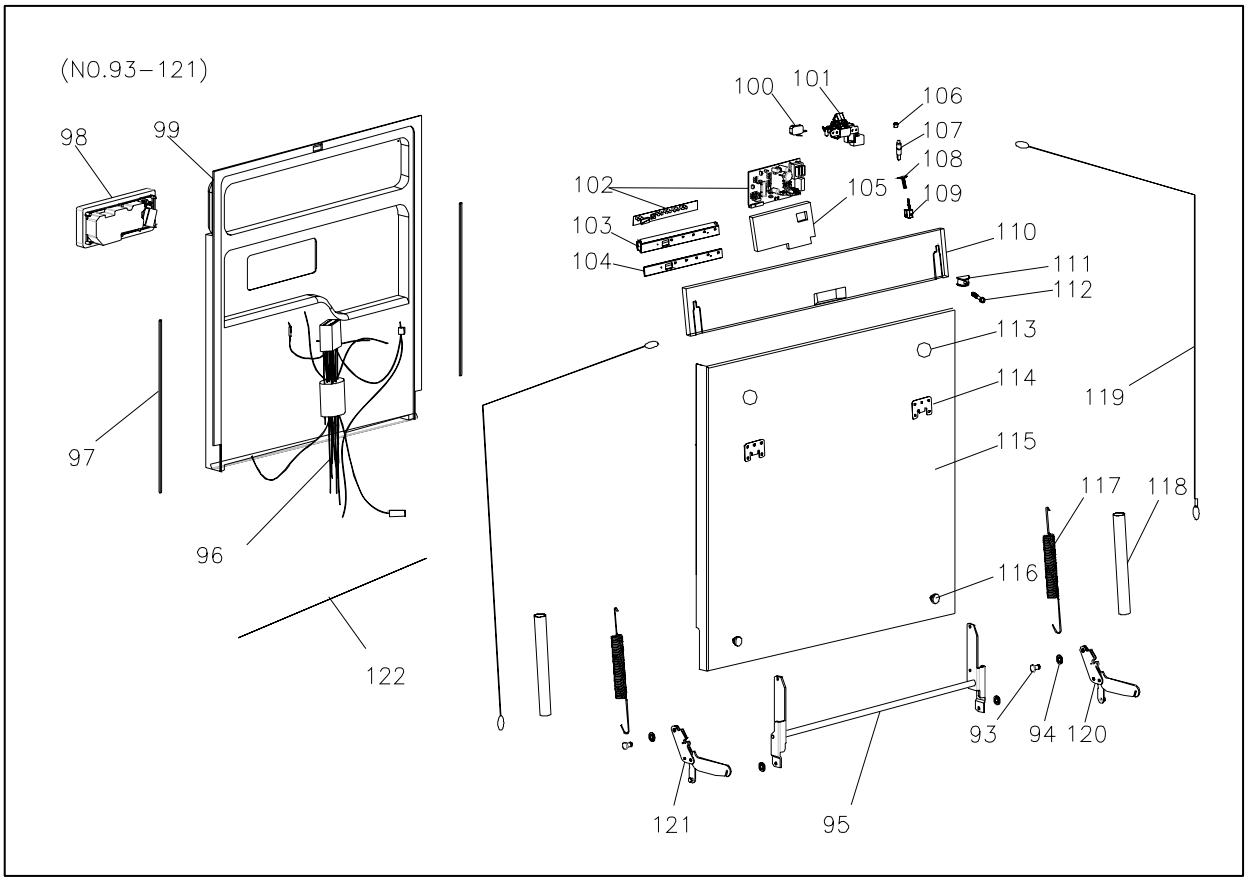
Edition:2007/01