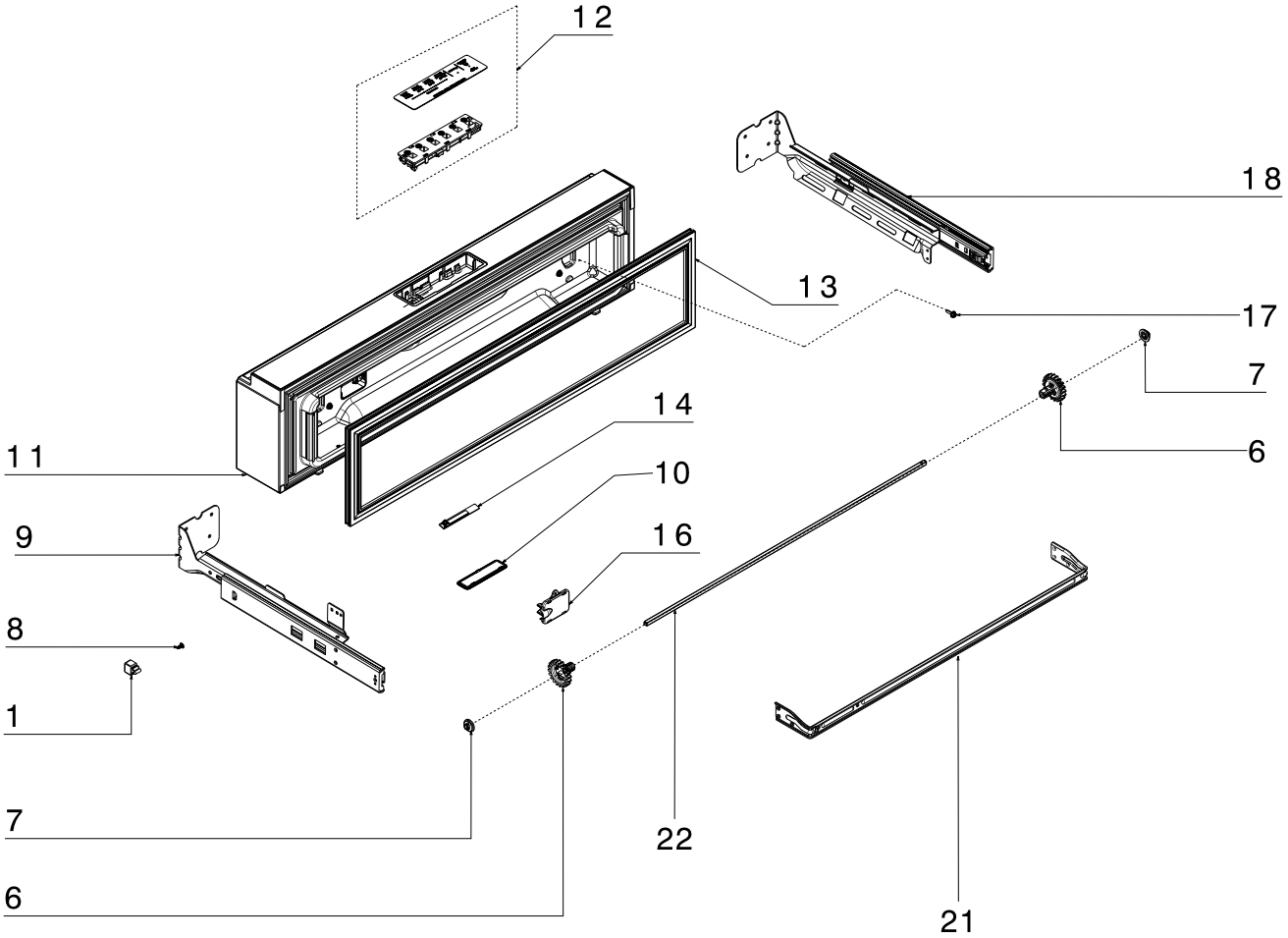

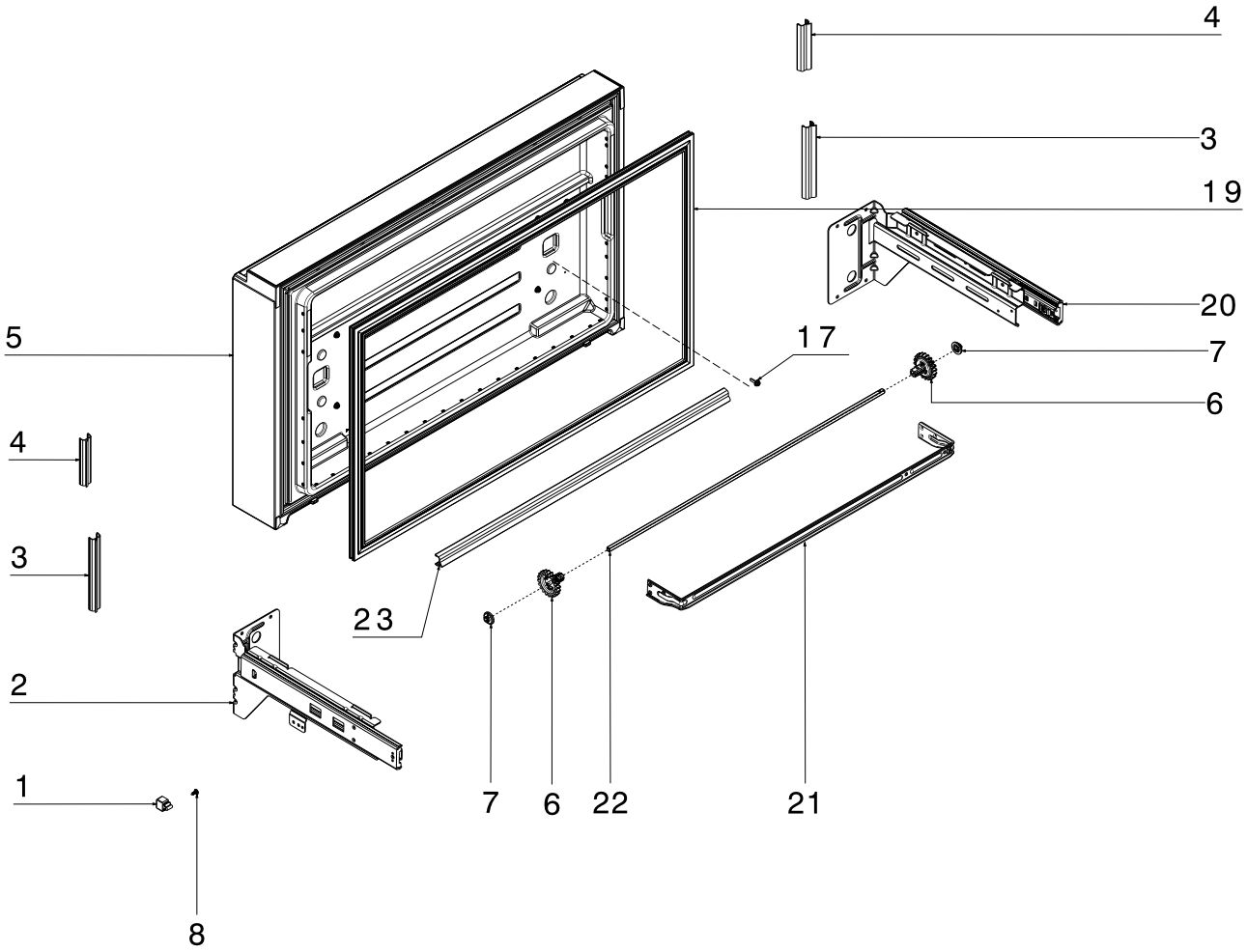

P09253079138