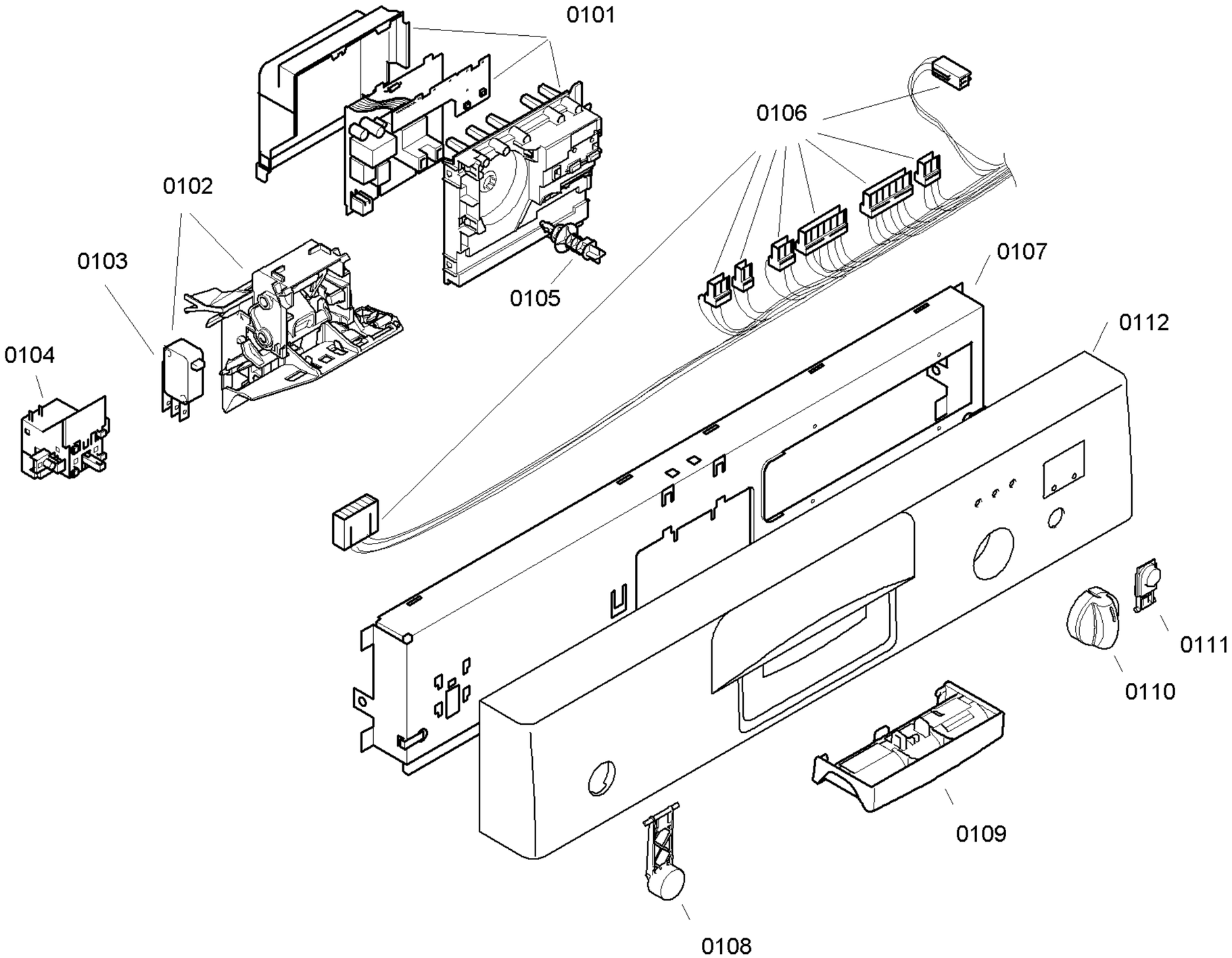

Copyright © (2009) by Bosch / ESHOP_7_2

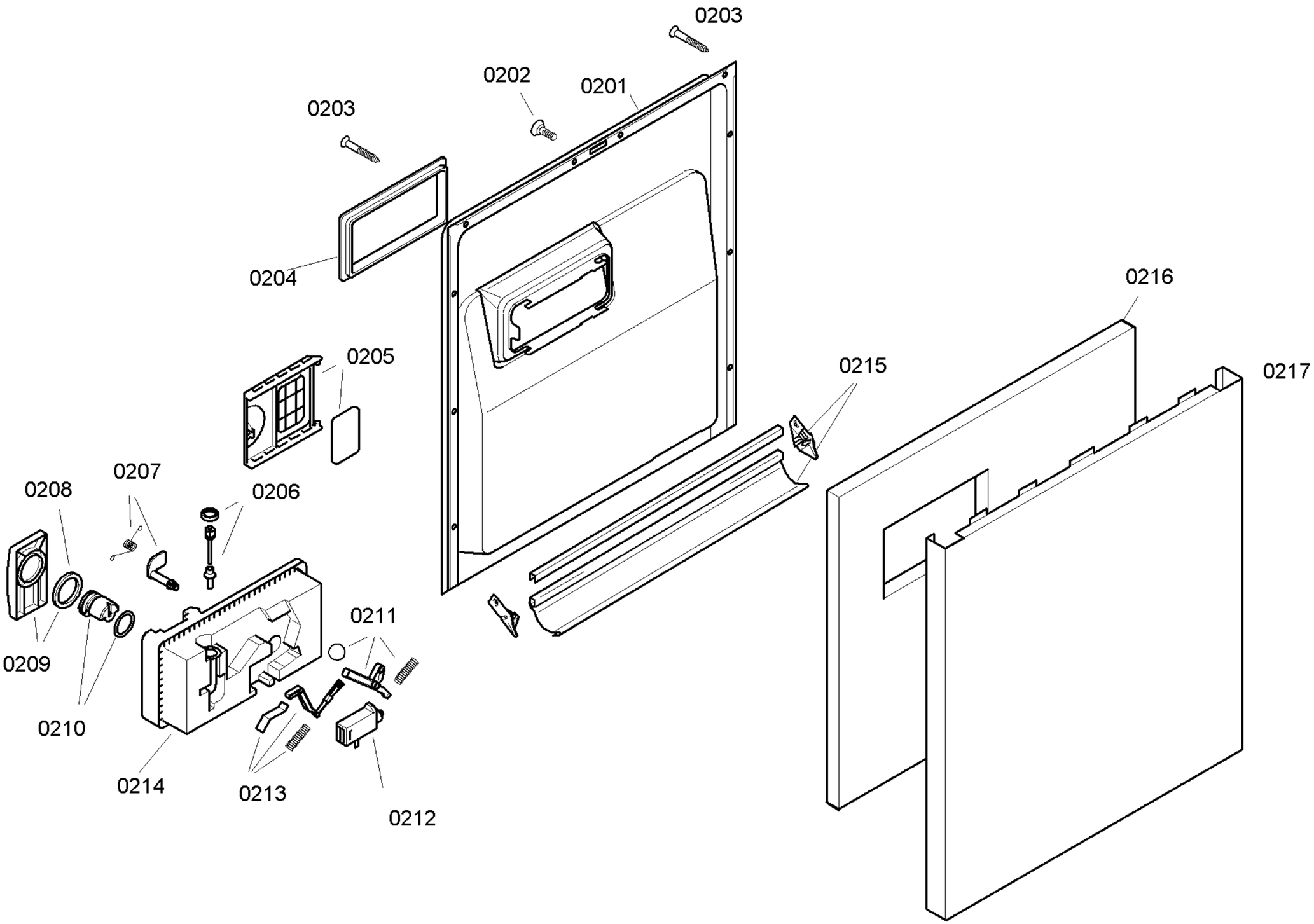

Copyright © (2009) by Bosch / ESHOP_7_2

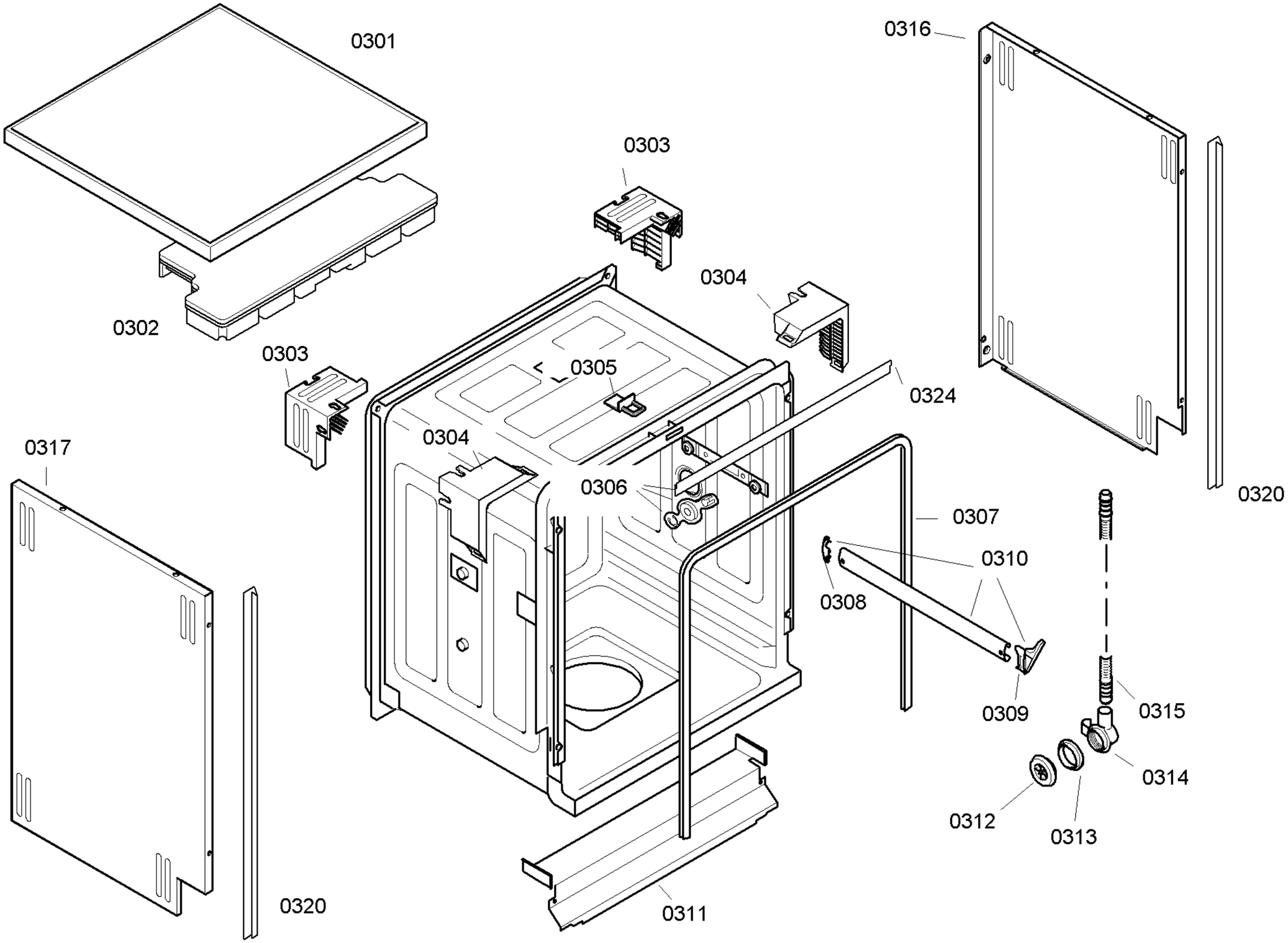

583000001227 62 aet 000 a 3/6

Copyright © (2009) by Bosch / ESHOP_7_2

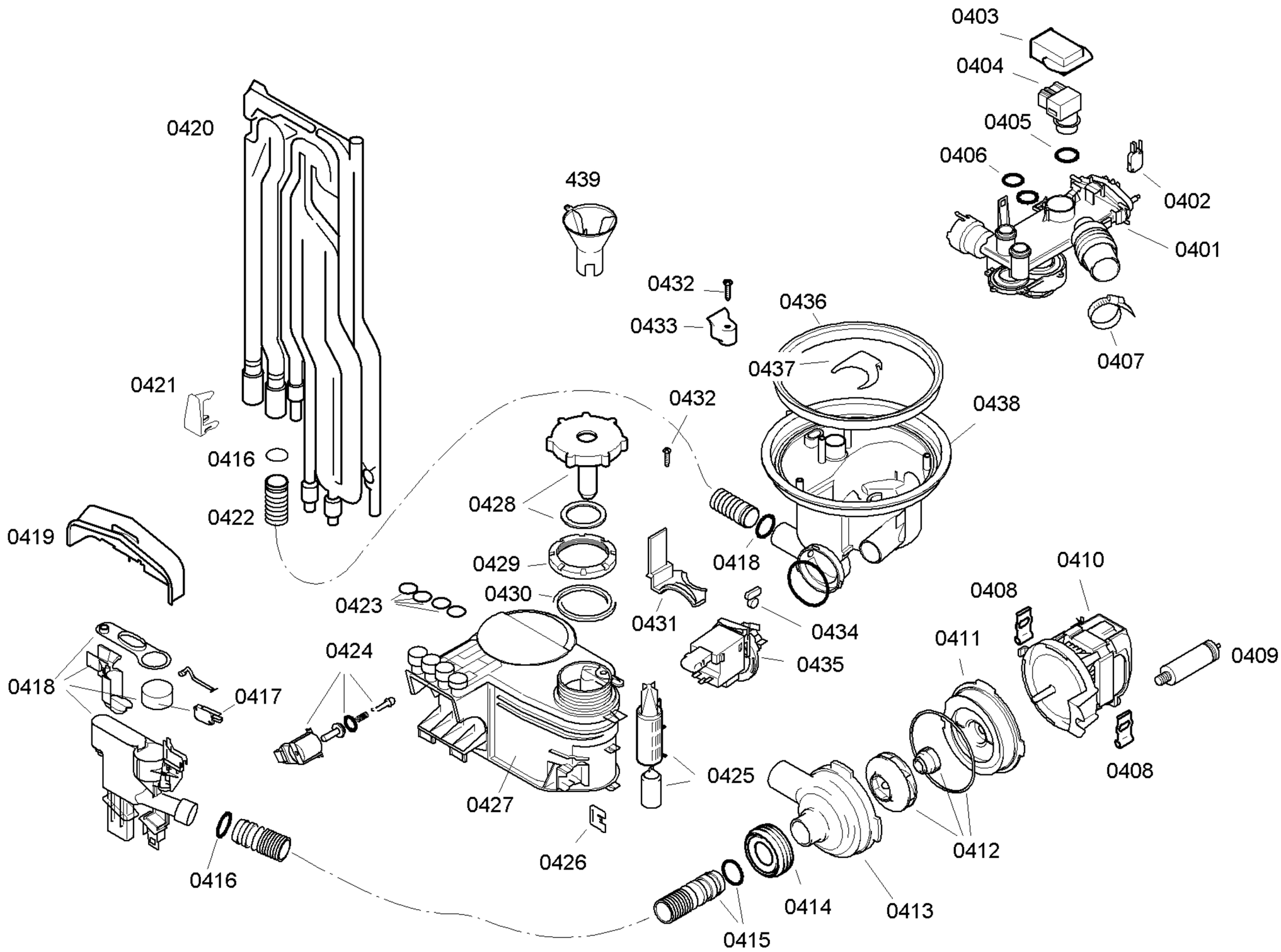

Copyright © (2009) by Bosch / ESHOP_7_2

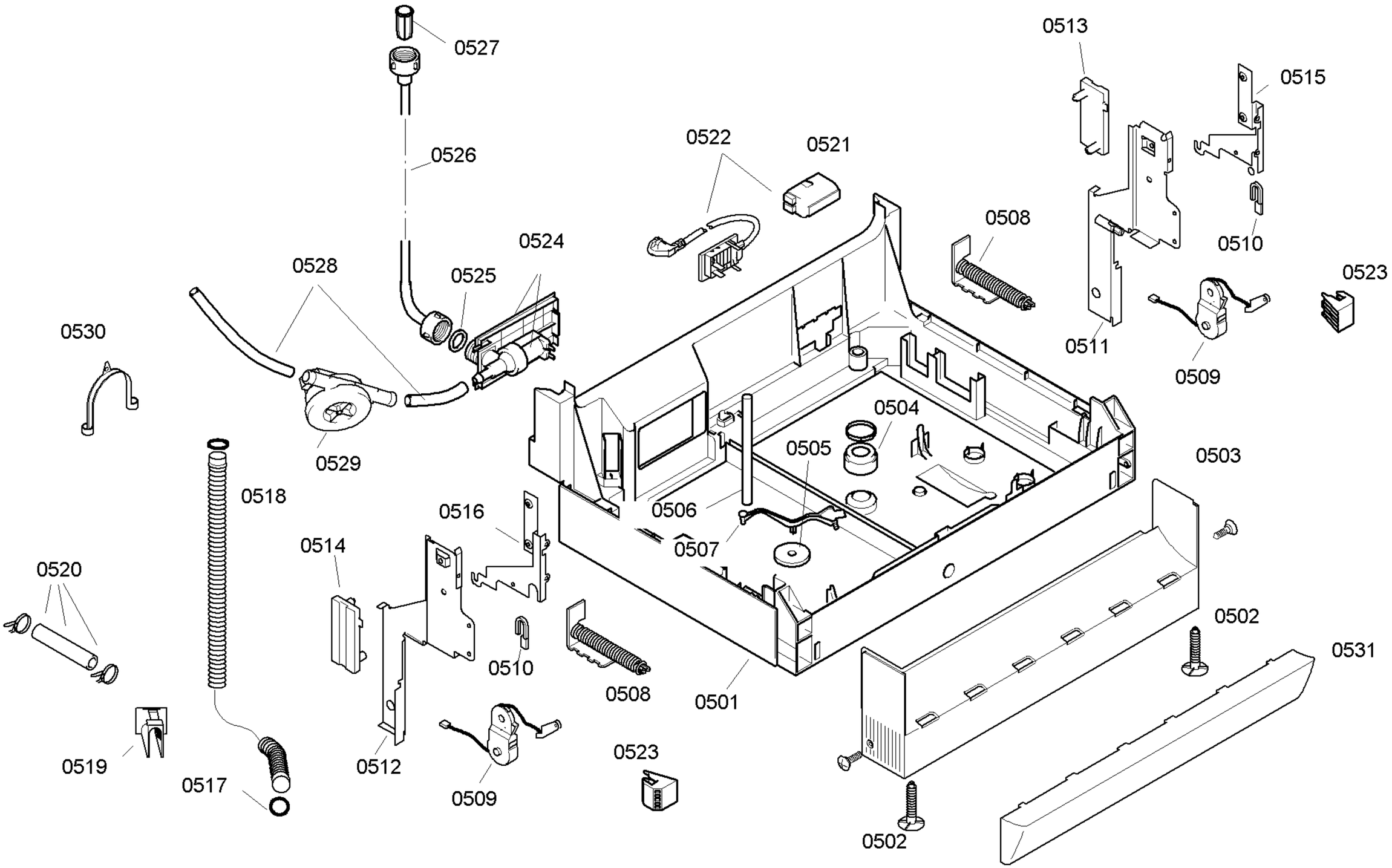

Copyright © (2009) by Bosch / ESHOP_7_2

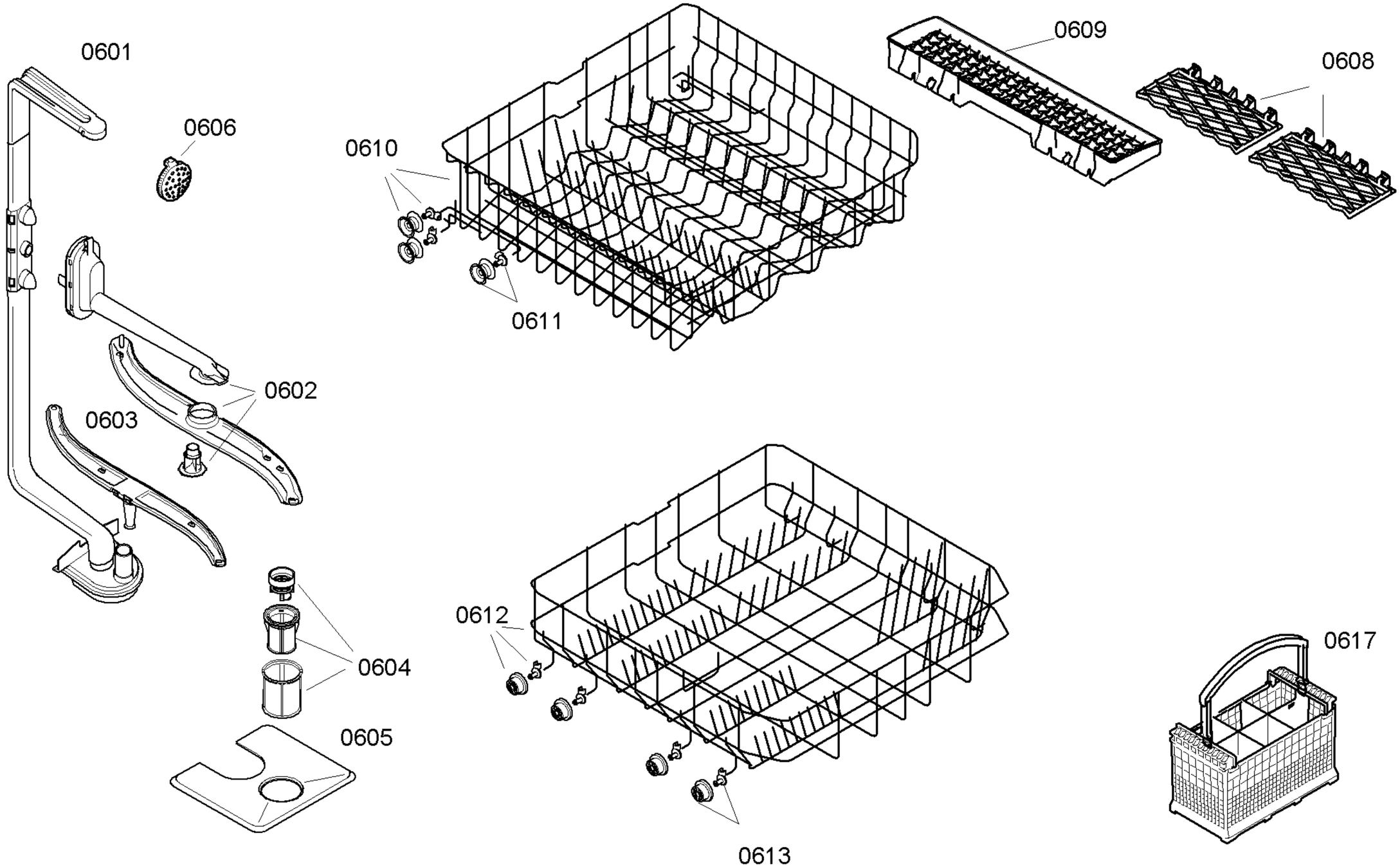

Copyright © (2009) by Bosch / ESHOP_7_2