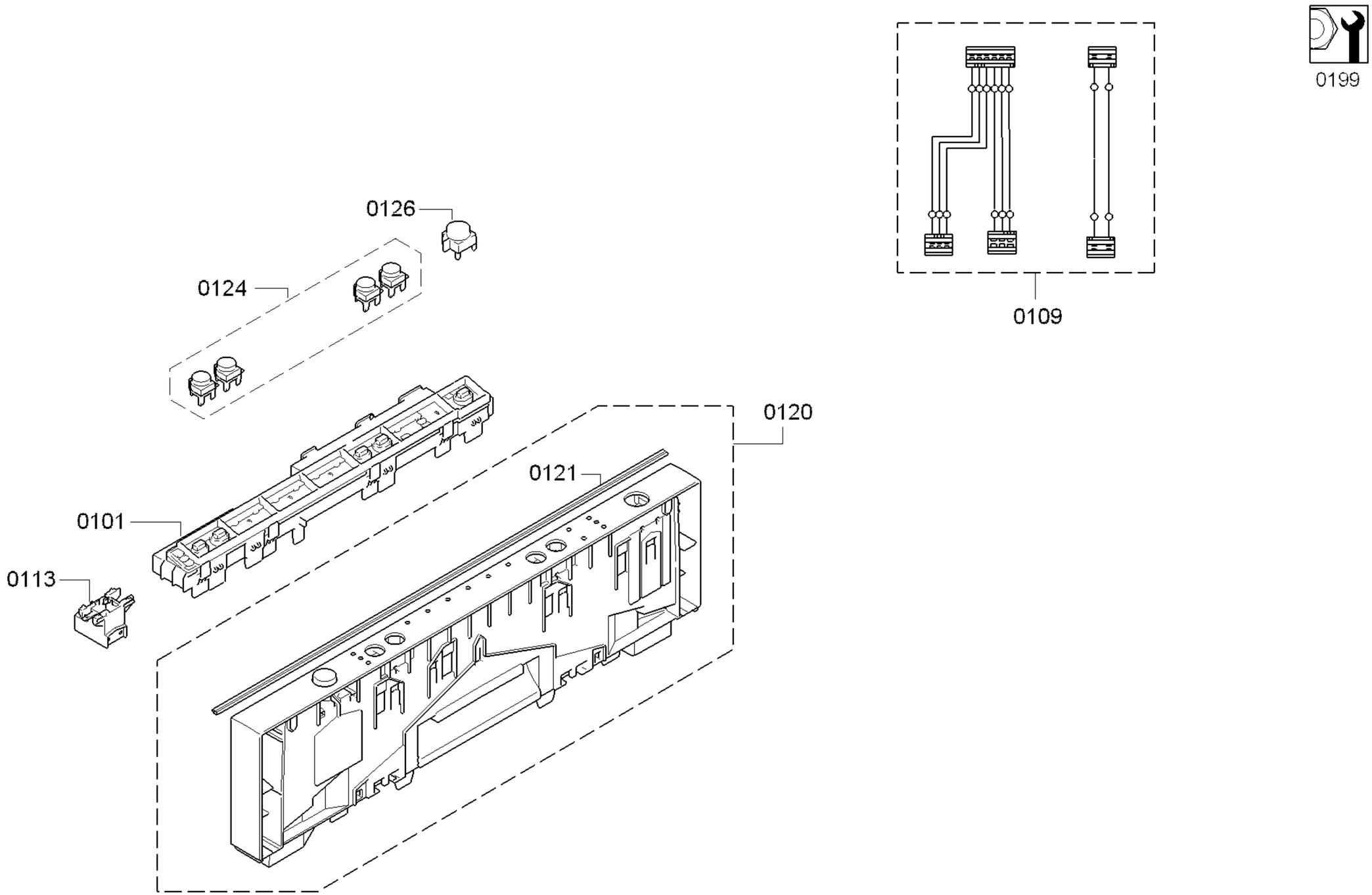

Copyright © (2013) by

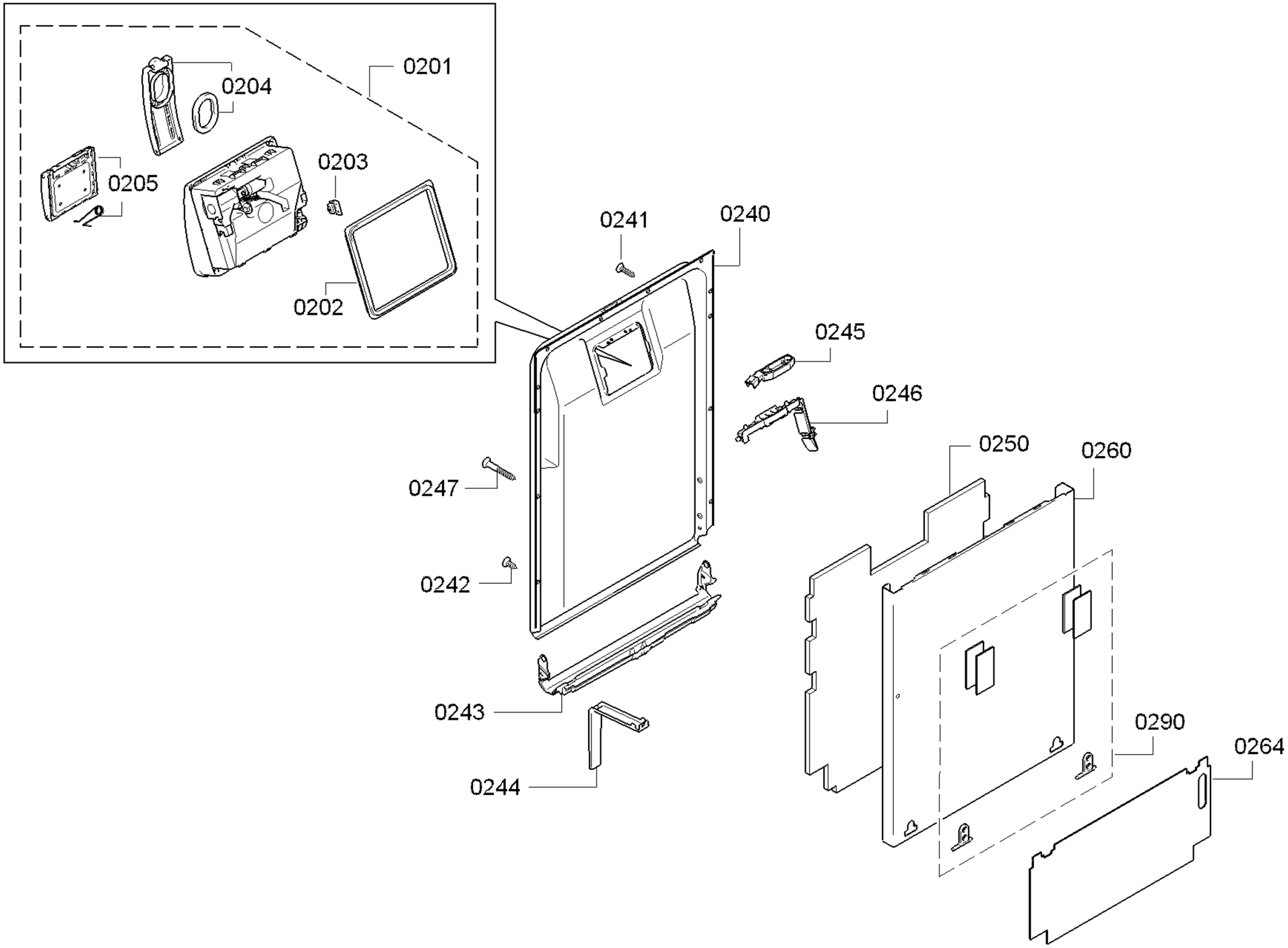

58300000165920 aet 000 a 2/6

Copyright © (2013) by

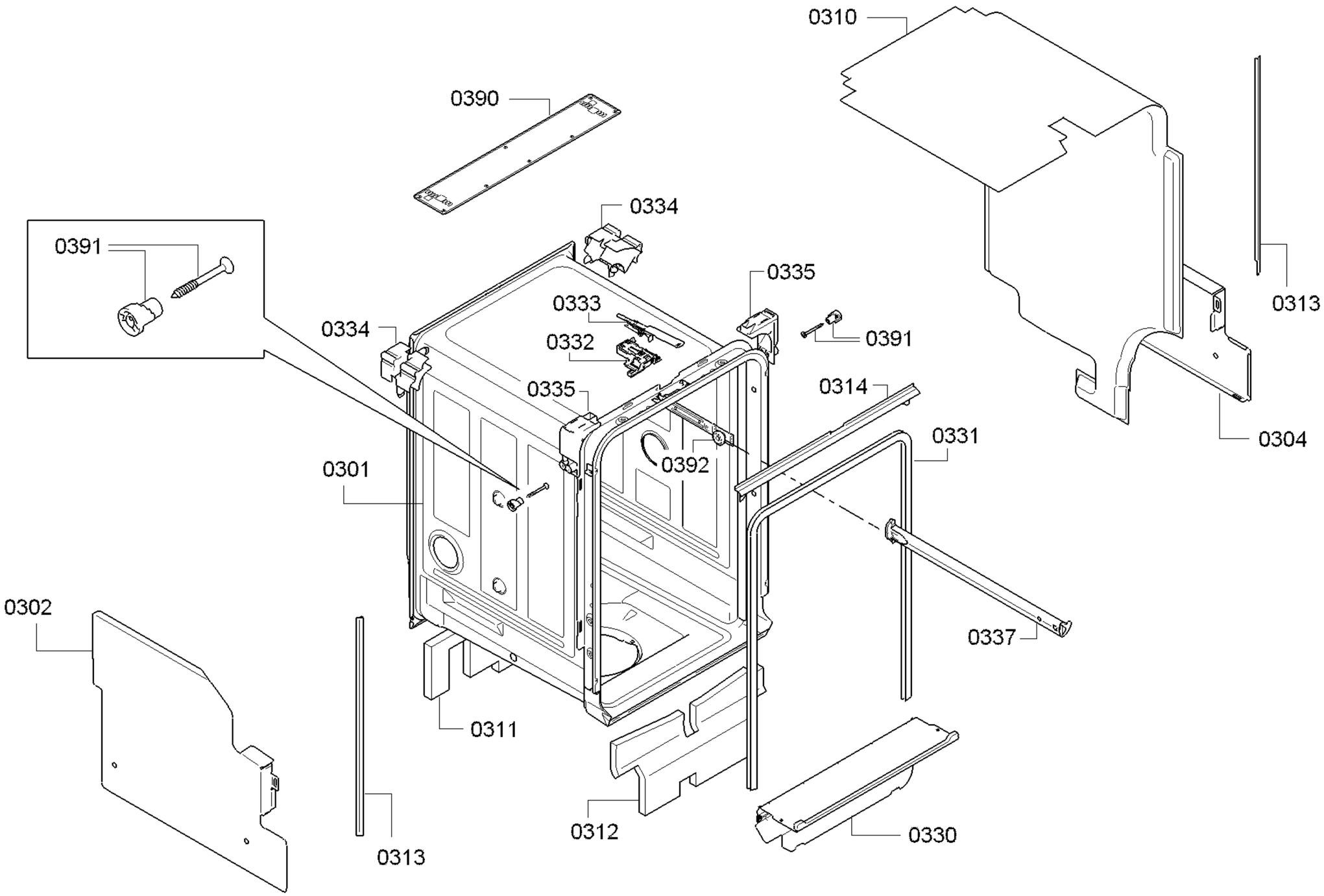

58300000165920 aet 000 a 3/6

Copyright © (2013) by

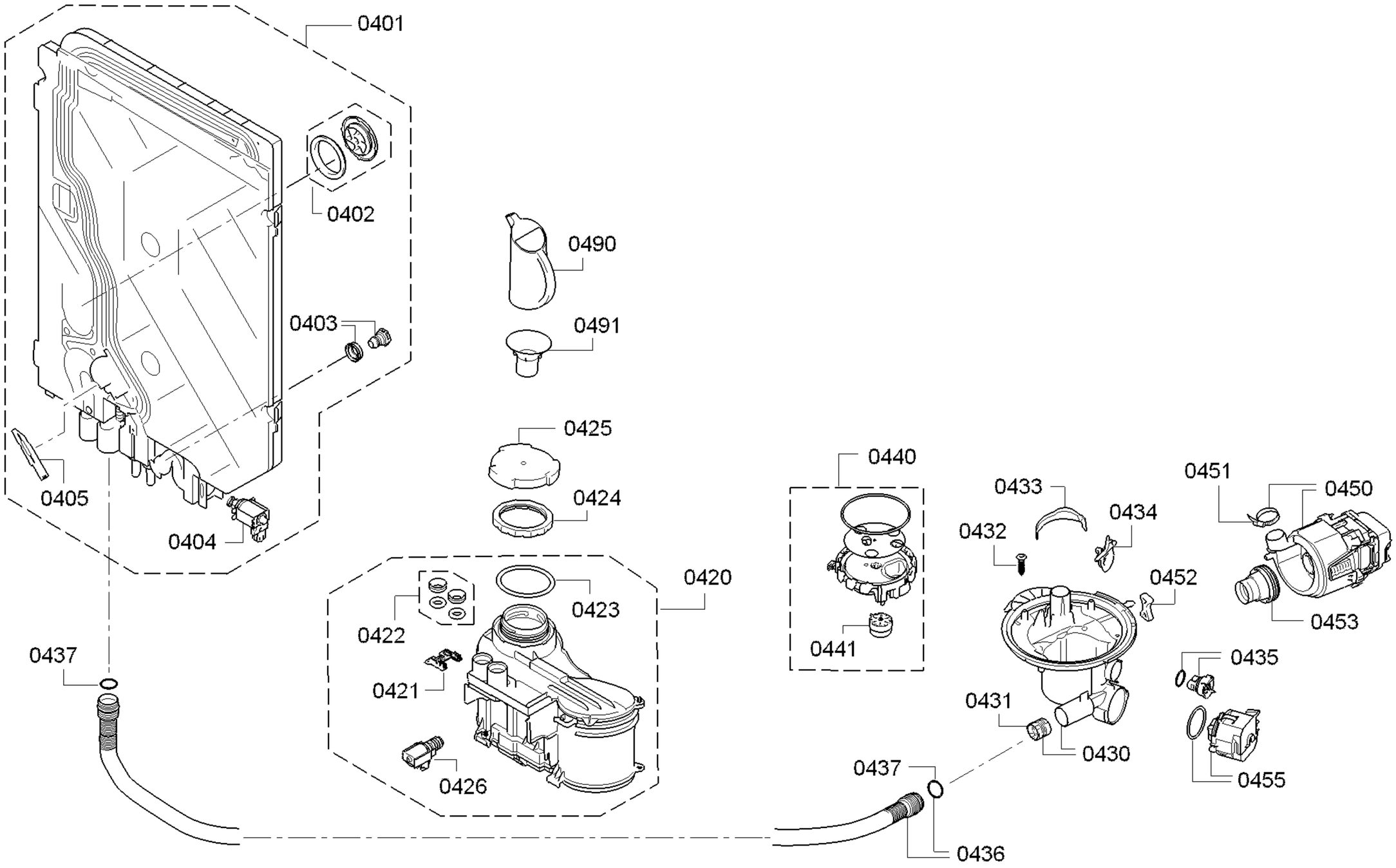

Copyright © (2013) by

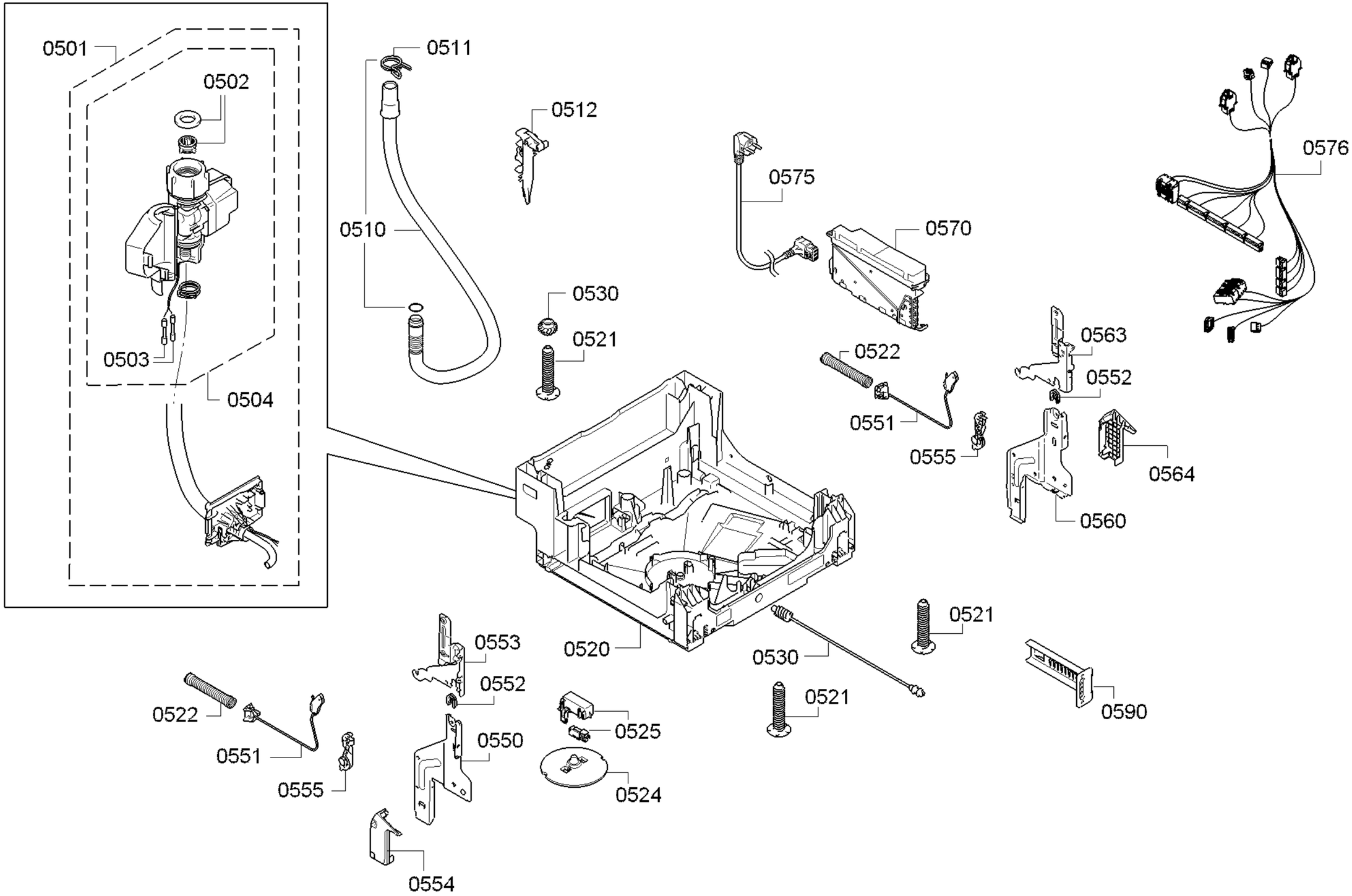

Copyright © (2013) by

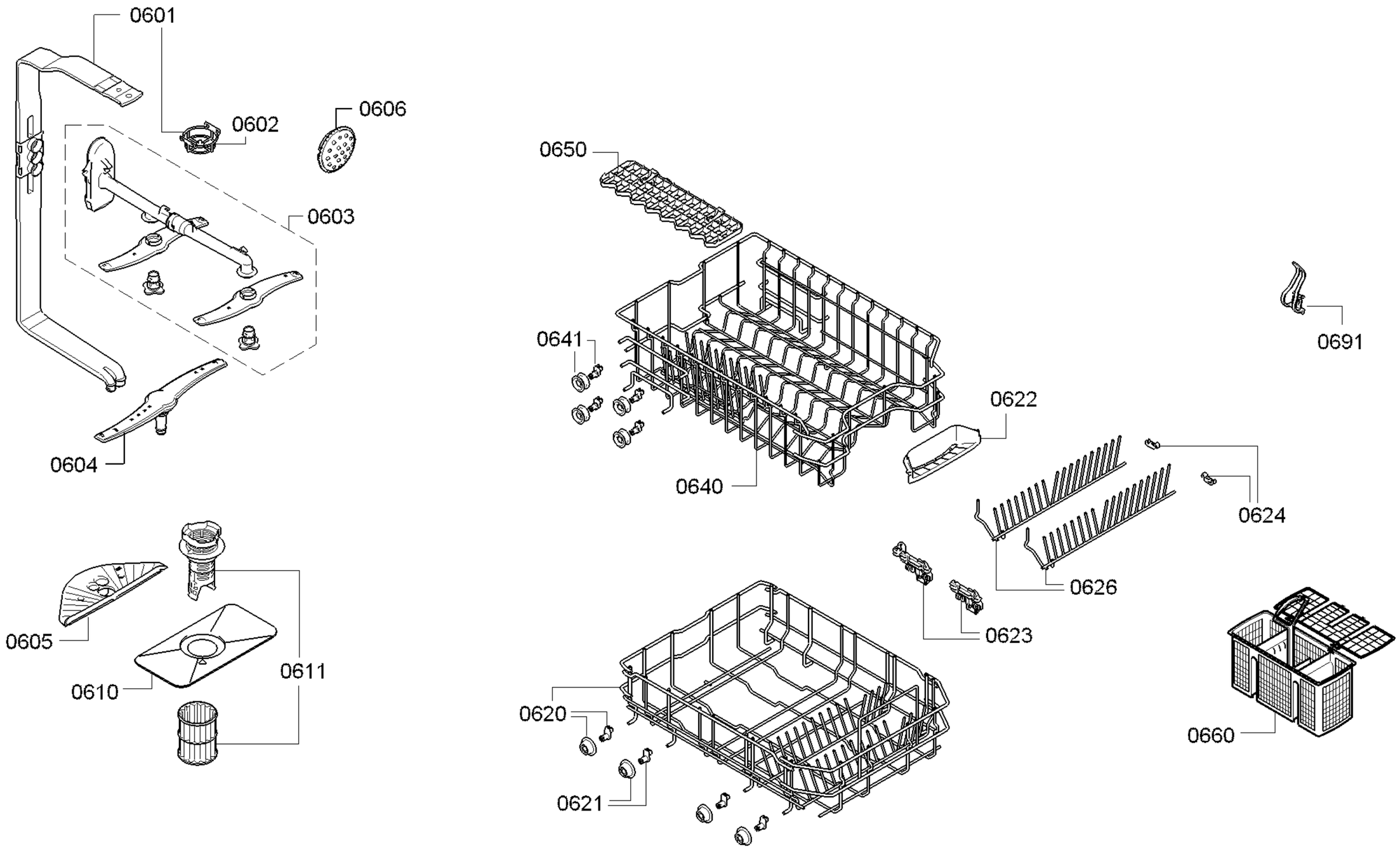

58300000165920 aet 000 a 6/6

Copyright © (2013) by