EXPLODED VIEWS-1

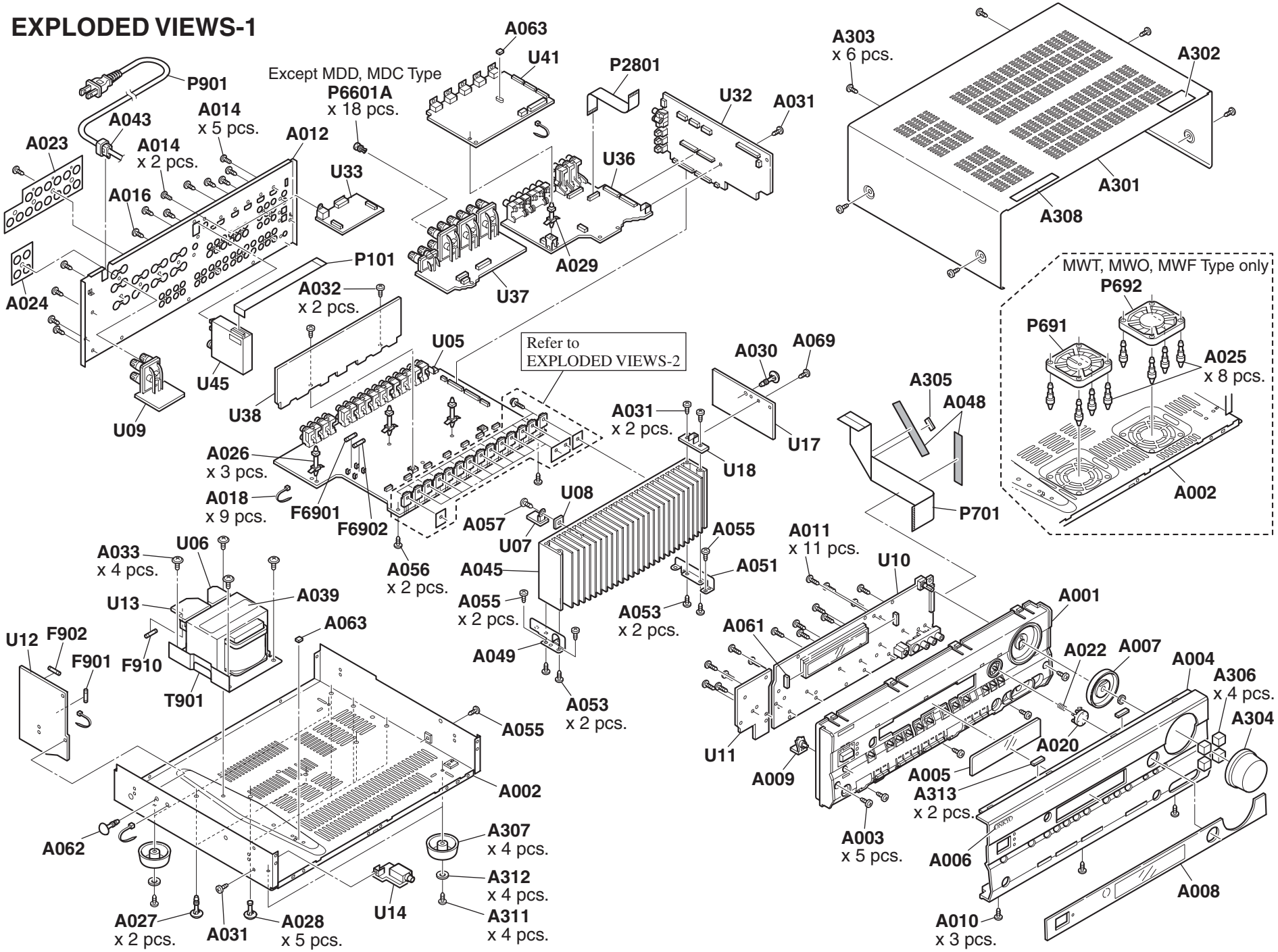
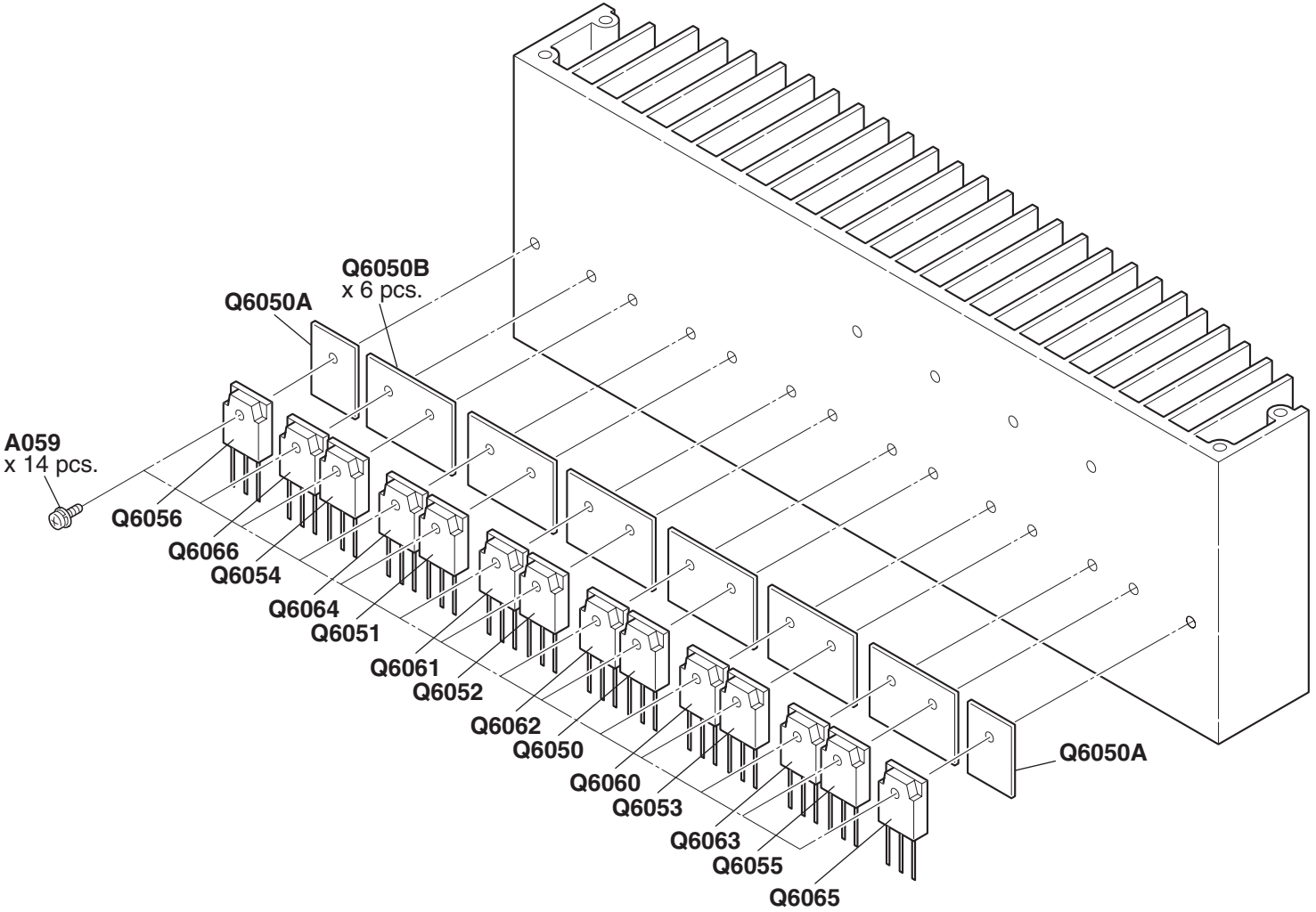
EXPLODED VIEWS-2