EXPLODED VIEW

BASE ASSEMBLY, BODY

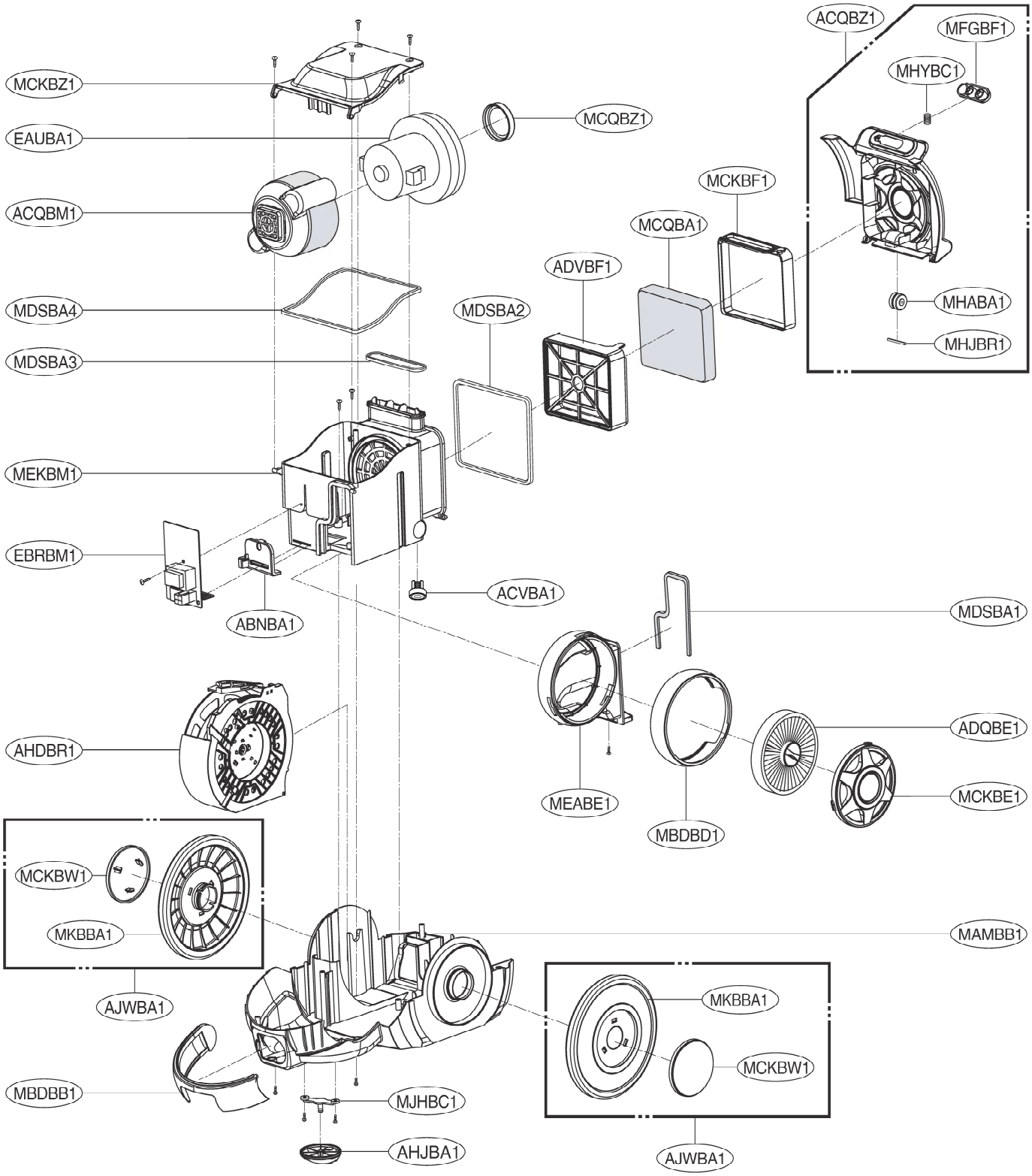

Copyright © 2007 LG Electronics. Inc. All right reserved.
Only for training and service purposes

LGE Internal Use Only

COVER ASSEMBLY, BODY

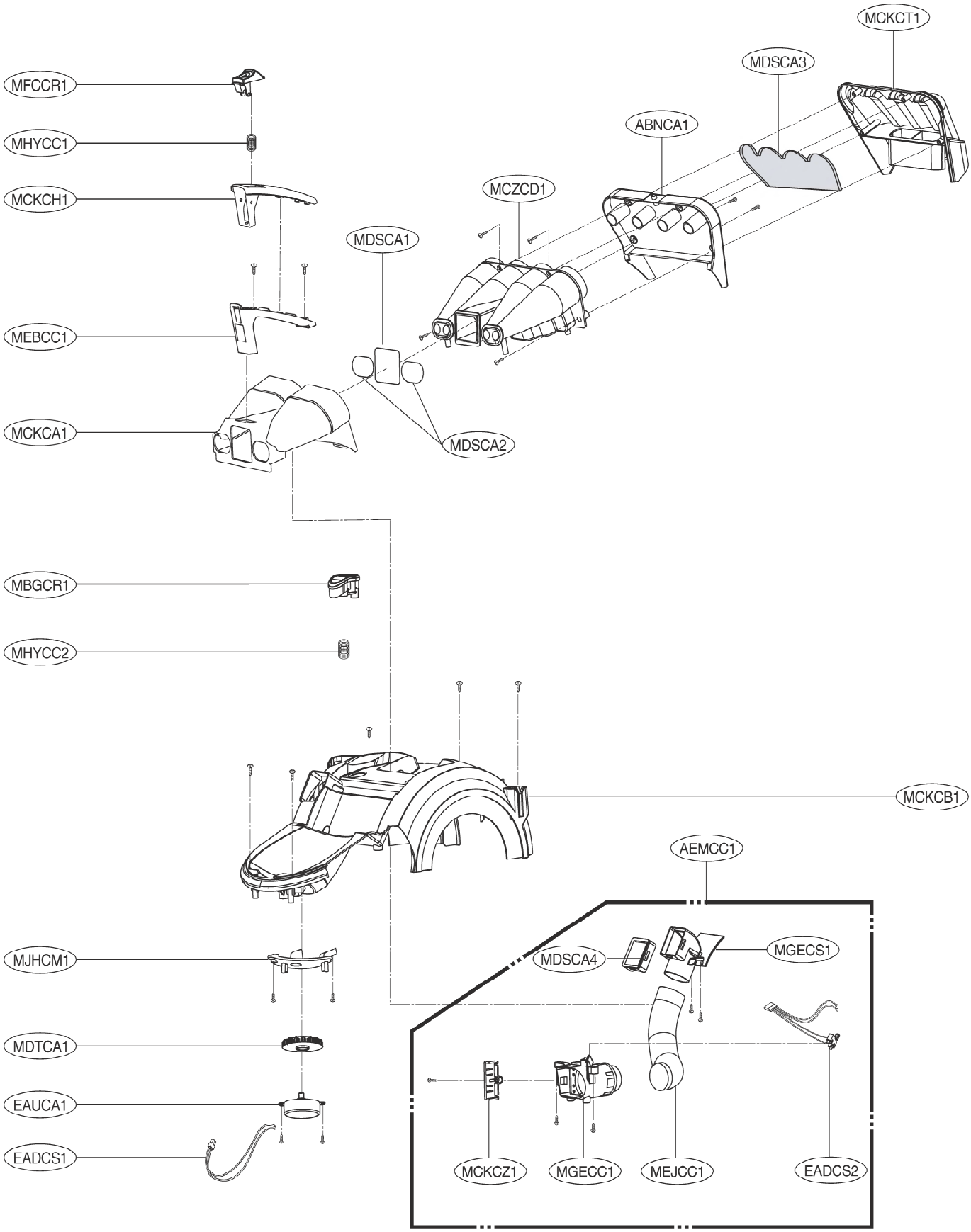

Copyright © 2007 LG Electronics. Inc. All right reserved.
Only for training and service purposes

TANK ASSEMBLY, DUST

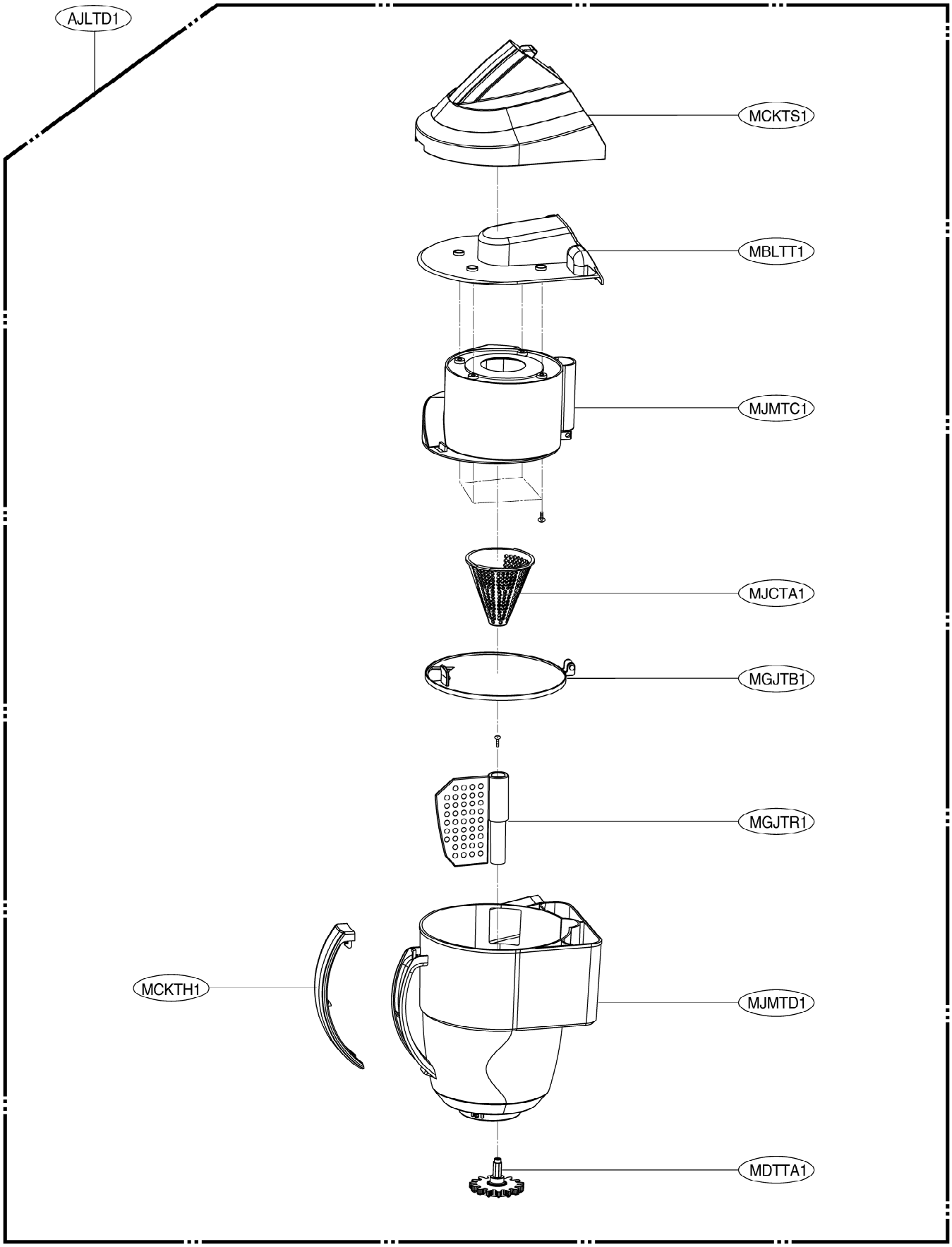

Copyright © 2007 LG Electronics. Inc. All right reserved.
Only for training and service purposes

LGE Internal Use Only

ACCESSORIES

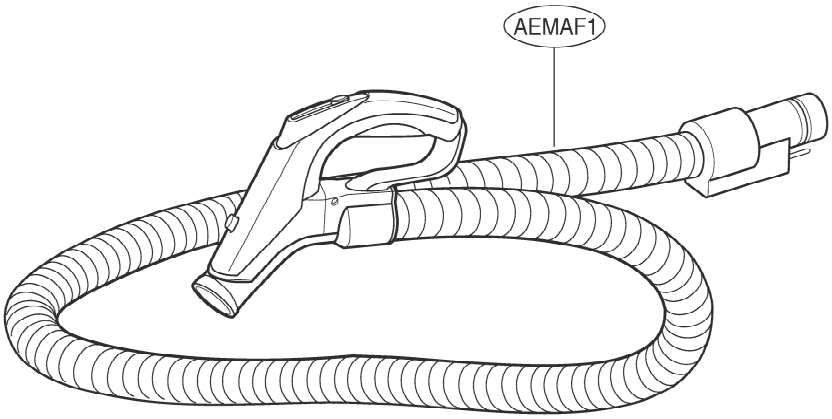

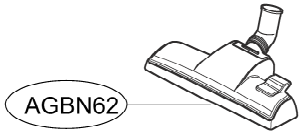

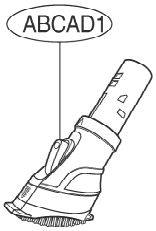

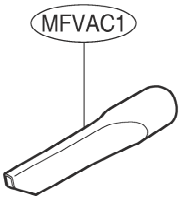

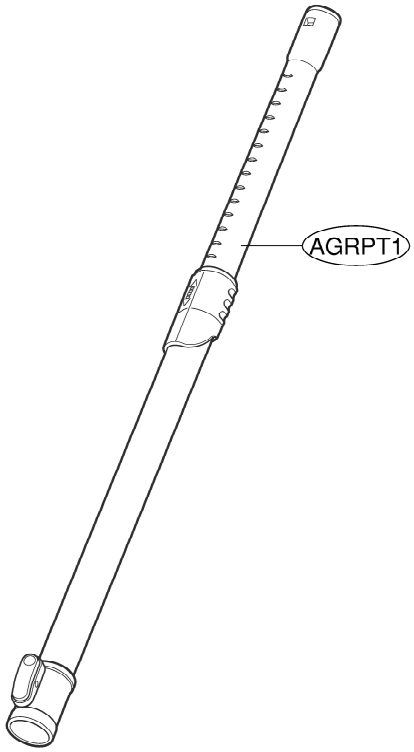

Copyright © 2007 LG Electronics. Inc. All right reserved.
Only for training and service purposes