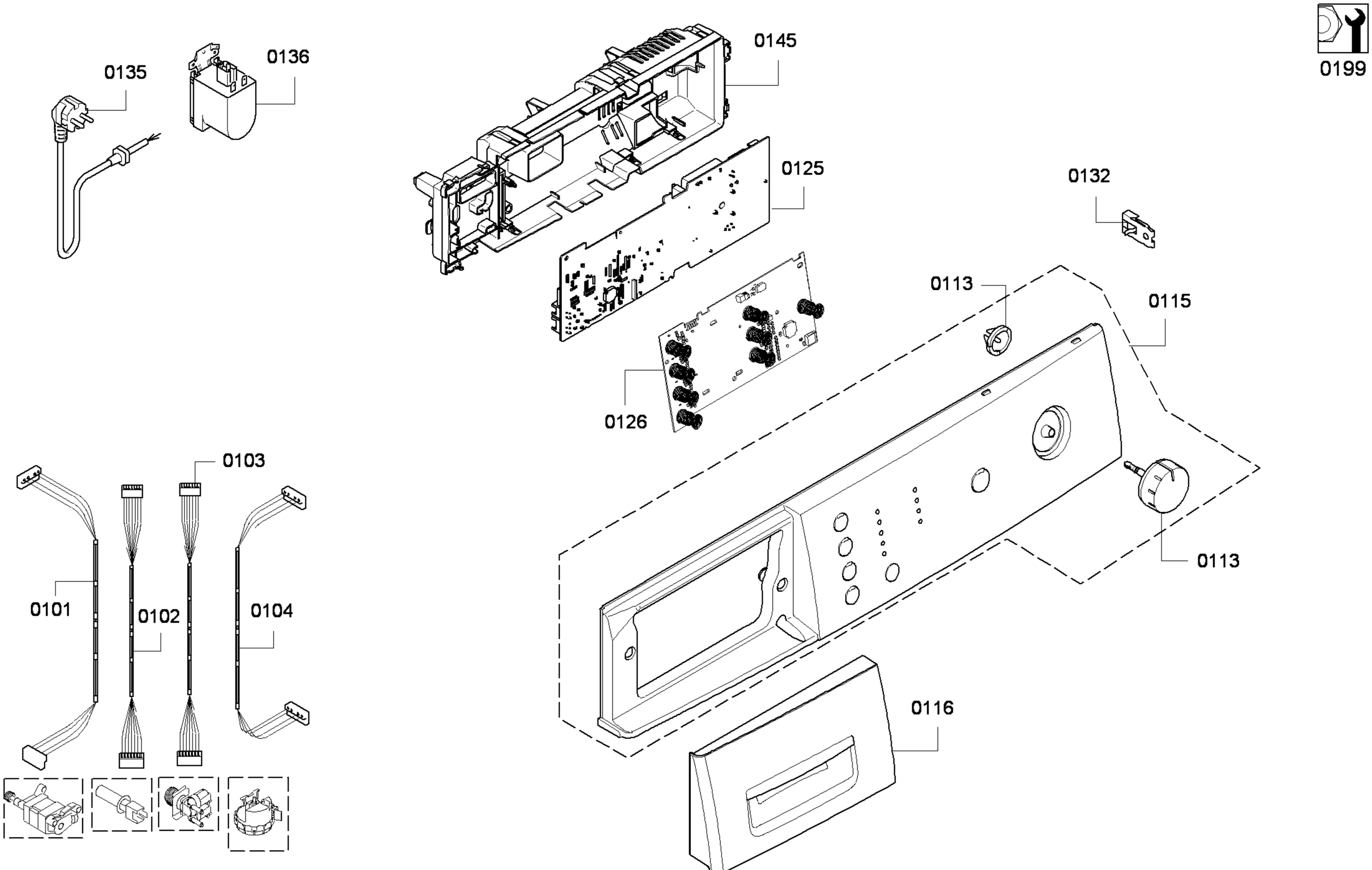

583000001435 78 aet 000 a 1/4

Copyright © (2010) by Bosch / 205502

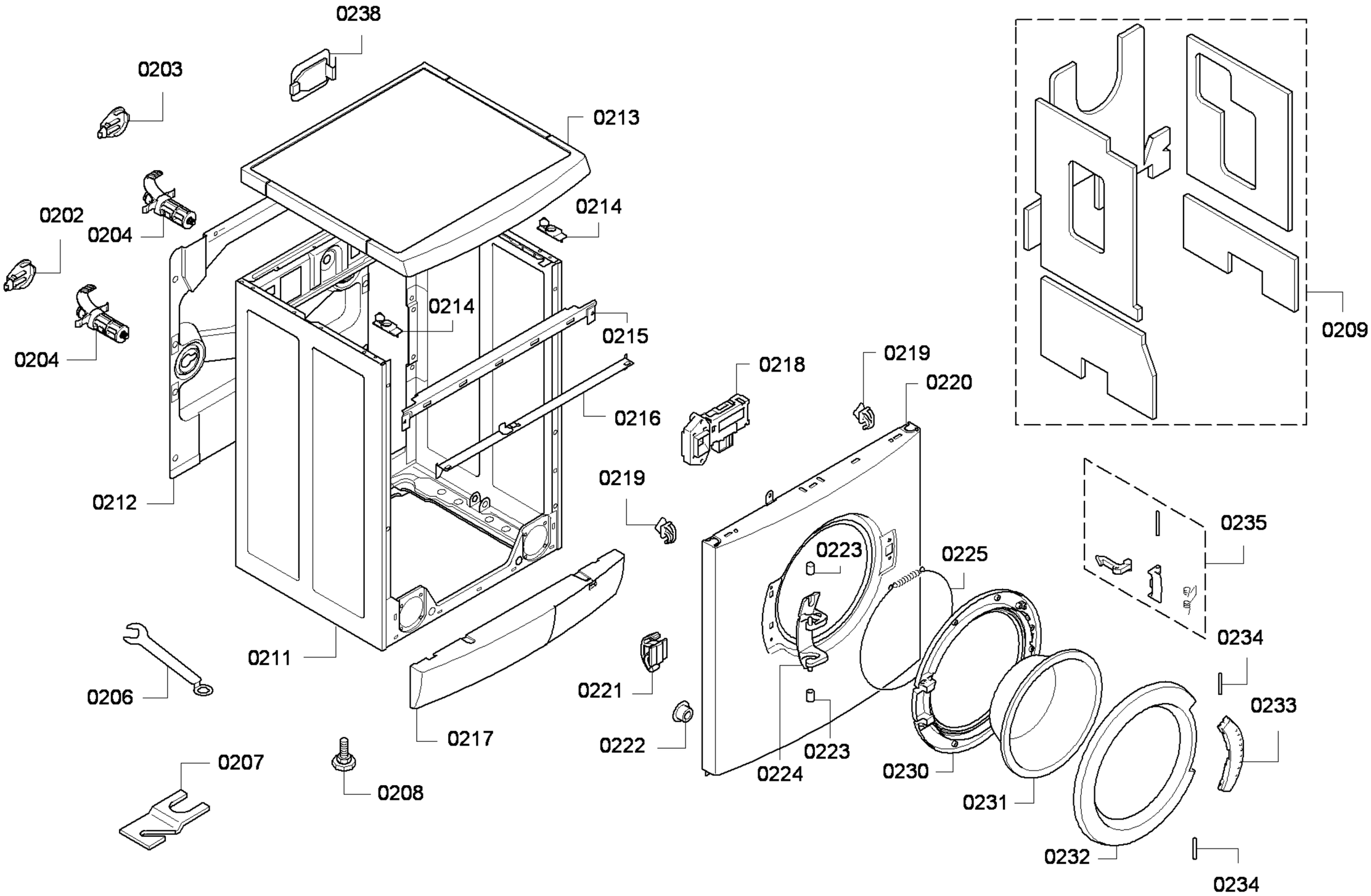

Copyright © (2010) by Bosch / 205502

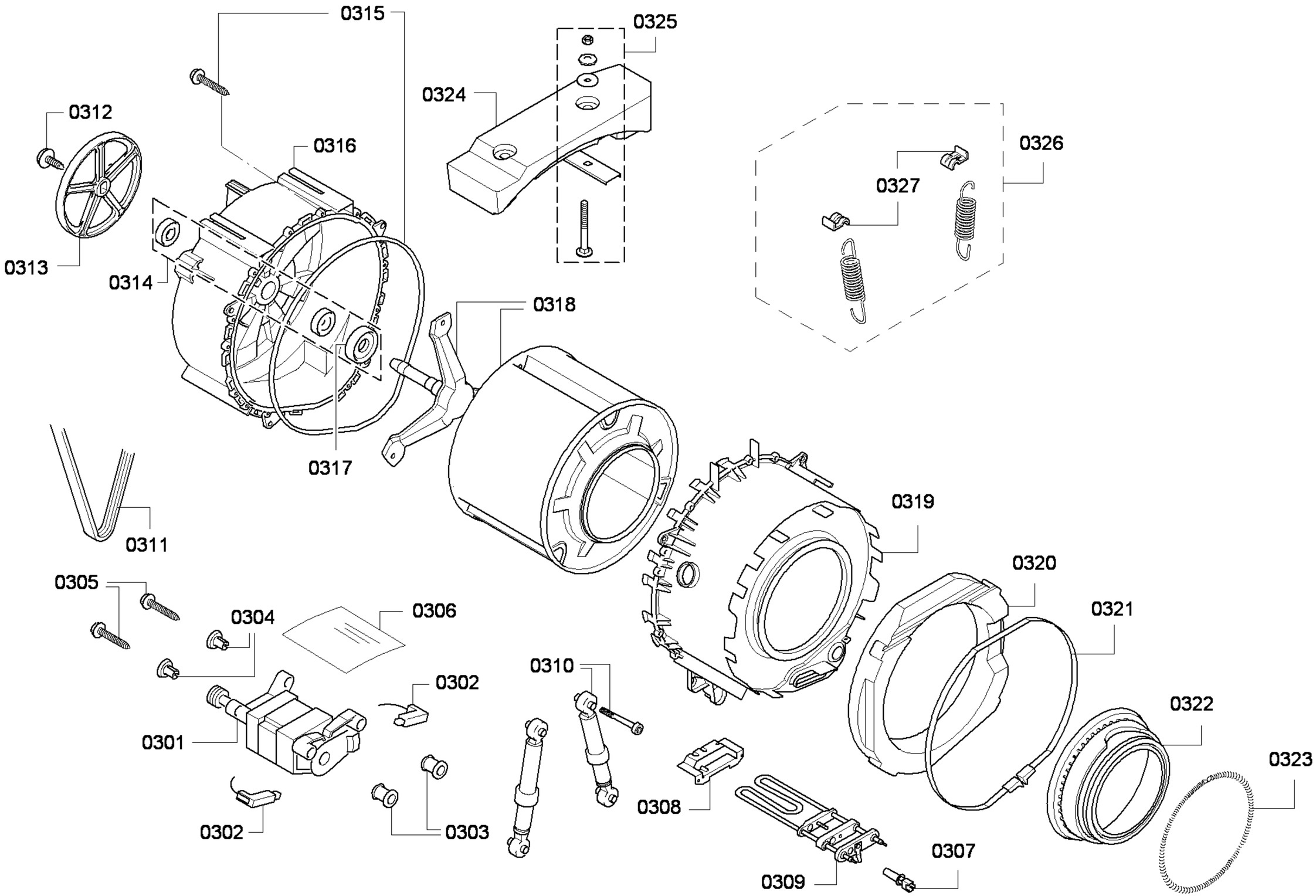

Copyright © (2010) by Bosch / 205502

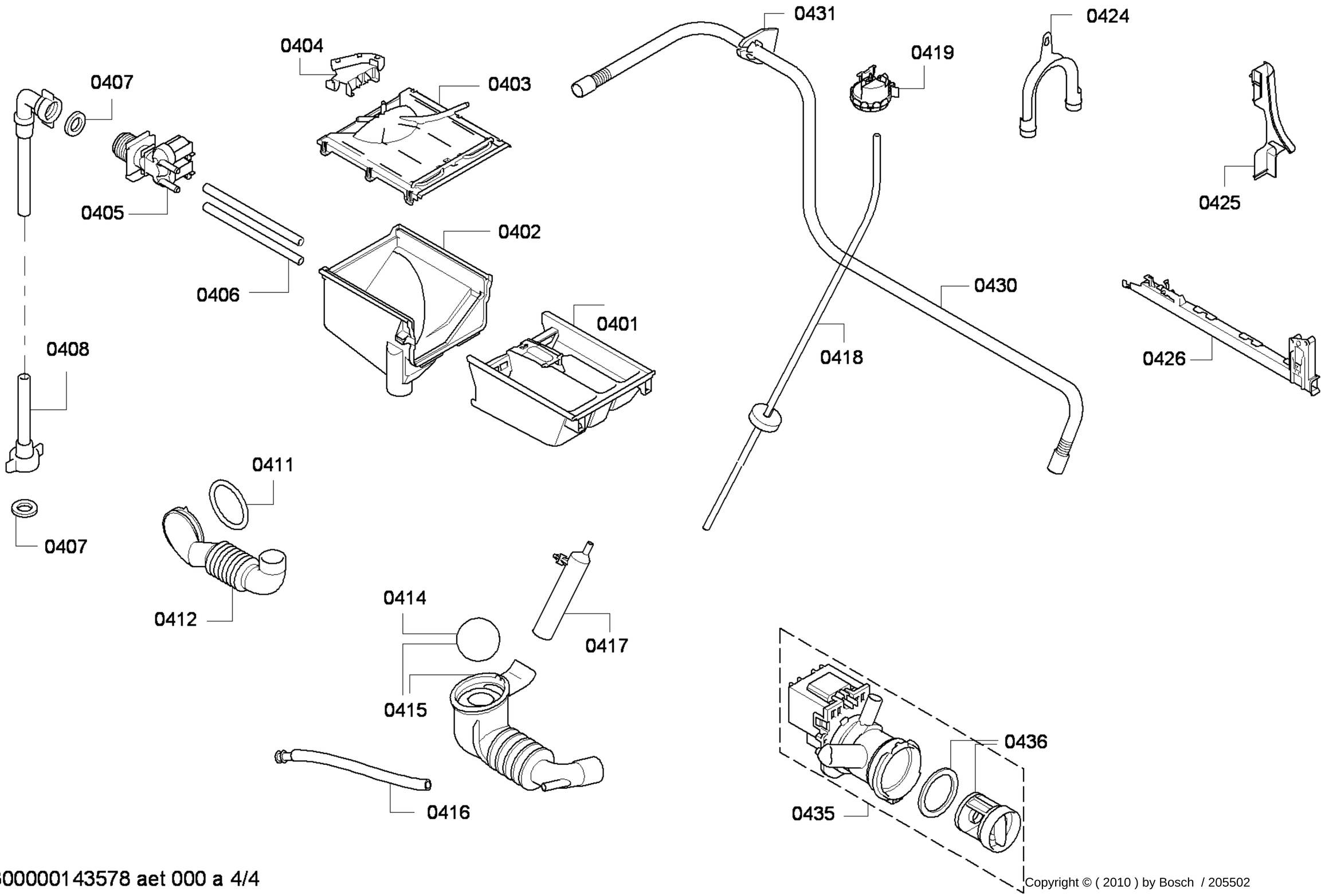

Copyright © (2010) by Bosch / 205502